KRACHT®
FLUID TECHNOLOGY AND SYSTEMS

KF 2.5 ... 3150

GEAR PUMPS

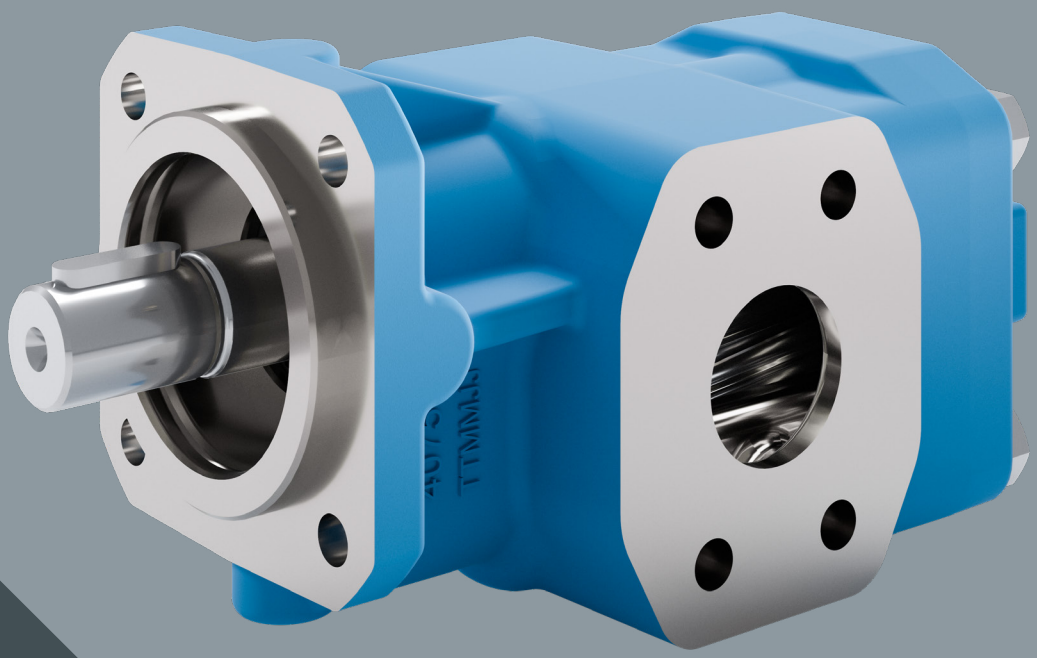

Part of Atlas Copco Group

KRACHT®

FLUID TECHNOLOGY AND SYSTEMS

Content

General	
Design, description, functional principle, operating instructions, direction of rotation	**4 - 6**
Shaft seals	**7**
Valves	
Valves that can be mounted on gear pumps	**8**
Valves that can be integrated into pipes	**9**
Variants / Options	
Noise optimisation versions, multiple pumps, motor-pump units	**10**
Technical data	
General characteristics	**11**
Technical characteristics KF	**12**
Technical characteristics KF-F (for fuels)	**13**
Materials / Temperatures	**14**
Viscosity-dependent differential pressures / Characteristics of shaft seals	**15**
Discharge flow and required drive power	**16 - 19**
Type key	
KF (pump)	**20**
KF (mounted valve)	**21**
KF-F (for fuels)	**22**
Atex	**23**
Dimensions and weights – Pumps	**24 - 30**
Dimensions and weights – Motor-pump units	**31 - 34**
Technical data	
Standard motors	**35**
KF / KF-F 2.5 … 630 with magnetic coupling	**36**
Technical data – accessories	
Bellhousing, couplings, flanges	**37 - 40**

General

KF / KF-F 2.5 … 630 – two-part housing

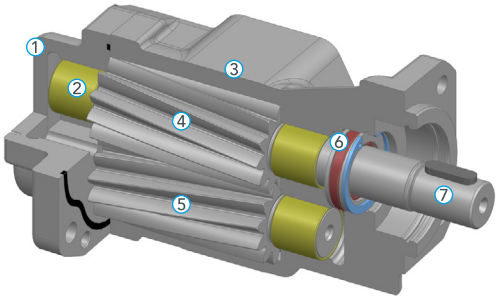

1 Housing cover
2 Bearing bush
3 Housing
4 Driving shaft
5 Driven shaft
6 Shaft seal
7 Driven shaft end with feather key

KF / KF-F 2.5 … 630 with magnetic coupling (MAC)

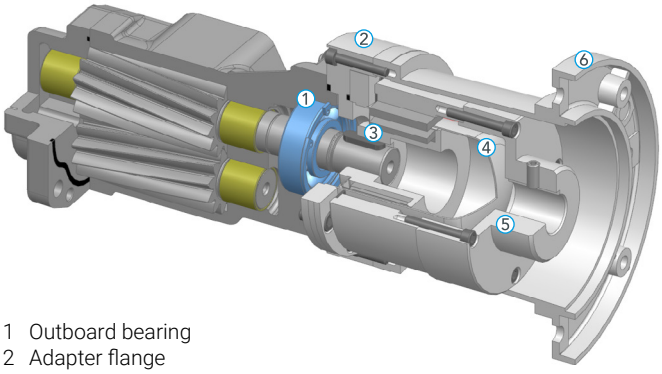

1 Outboard bearing
2 Adapter flange
3 Inner rotor
4 Containment shell
5 Outer rotor
6 Bellhousing

KF 730 … 3150 – three-part housing

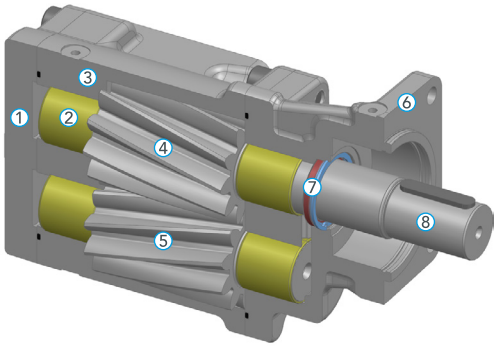

1 Housing cover
2 Bearing bush
3 Housing
4 Driving shaft
5 Driven shaft
6 Flange cover
7 Shaft seal
8 Driven shaft end with feather key

General

KF

Gear pumps from the KF low-pressure series are used to pump a wide variety of liquids. The KF gear pumps are characterised in particular by a wide range of variants and can also be retrofitted.

In the standard version, the housing parts of nominal sizes 2.5 … 1500 are made of grey cast iron, while those of nominal sizes 1800 … 3150 are made of spheroidal cast iron. The gear sets are made of high-strength case-hardened steel, hardened and mounted in special multi-material bearing bushes. The drive shaft is sealed by a radial shaft seal in the standard version and all sizes are designed with helical gearing. This, combined with a special gearing geometry, results in extremely low sound levels and low pressure pulsation.

KF-F – for fuels

The KF-F gear pumps were specially developed for pumping fuels, especially marine fuels. These must be viewed critically with regard to lubricity. Reduced sulphur diesel fuels (MGO/DMA) in particular have a low lubricity, which cannot be determined via the viscosity.

The HFRR test in accordance with ISO 12156 is a recognised method for measuring the lubricity of diesel fuels. The characteristic value determined in this way is known as the Wear Scar Diameter (WSD) and increases with decreasing lubricity. This characteristic value is specified by fuel manufacturers and can be used to assess the durability of components.

KF-F fuel pumps are fatigue-resistant up to a WSD value of 520 µm, which represents the minimum lubricity of MGO and DMA in accordance with ISO 8217. In addition, the pumps are extremely efficient, especially at high speeds. The KF-F pump can be used without restrictions for pumping fuels with a low sulphur content, MGO/DMA (gas oil) in accordance with ISO 8217.

KF with magnetic coupling (MAC)

Conventional seals reach their limits in various applications. Typical applications can be found in polyurethane systems, refrigeration machines and vacuum systems. For these applications, it is possible to equip the KF 2.5 … 630 with a magnetic coupling, which serves as a shaft seal and for transmitting the torque. The outer rotor of the magnetic coupling is mounted on the drive shaft and the inner rotor directly on the pump shaft. The torque is transmitted by the magnetic forces between the outer and inner rotor. The containment can is located between the two rotors and hermetically seals the pump.

The magnetic coupling is used when absolute tightness is required between the pump chamber and the atmosphere, e.g. when dosing isocyanate, where contact with air would lead to unwanted hardening of the medium. It can be used in vacuum operation, which reliably prevents air from entering the system (e.g. filling brake fluid) and also ensures leak-free operation when operating in closed systems with high inlet pressure on the pump suction side, making the magnetic coupling ideal for dosing hazardous and harmful media.

General

Functional principle

Gear pumps in the KF low-pressure series (up to 25 bar) are external gear pumps that operate according to the positive displacement principle. The fluid is transported from the suction side to the discharge side by rotating the two gear shafts (driving shaft and driven shaft) in the tooth gaps along the housing wall. The geometric delivery volume is displaced per gear wheel revolution. A value that is rounded to characterise the pump size as the nominal volume in technical documents.

Gear pumps are basically self-priming – extremely high viscosities may require a pre-pressure. The described displacement process initially takes place without pressure build-up. Only after external loads (delivery head, flow resistances or line elements) have been specified does the working pressure required to overcome these resistances materialise.

Suction side

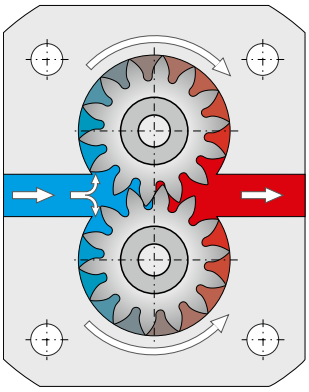

Pressure side

Operating instructions

- The media must guarantee a certain minimum lubricity, be chemically compatible with the materials used and should not contain any coarse solid particles.
- The pumps may only be operated in the specified direction of rotation.
- A pressure relief valve in the system or on the pump is recommended to prevent impermissible overpressure of the pump.
- Dry running must be avoided.
- The optional pressure relief valve D or B fitted to the pump may only respond briefly during operation. Otherwise there is a risk of the pump overheating. To discharge a partial flow rate over a longer period of time, a valve with external discharge must be used.

Direction of rotation

The following applies to the direction of rotation:

- When looking at the end of the pump shaft, the direction of delivery is from left to right if the shaft is rotating clockwise.
- When looking at the end of the pump shaft, the direction of delivery is from right to left if the shaft is rotating anti-clockwise.

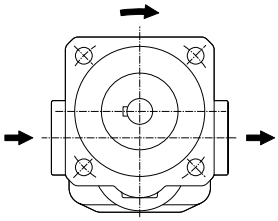

Suction side Pressure side
Pump clockwise running

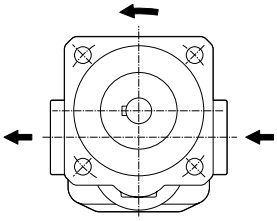

Pressure side Suction side
Pump anti-clockwise running

Shaft seals

Overview

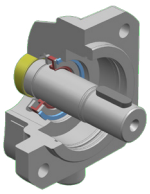

Single radial lip-type seal

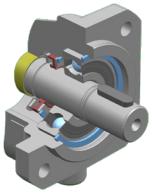

Single radial lip-type seal
and outboard bearing

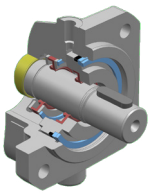

Double radial lip-type seal
and connection possibility for quench

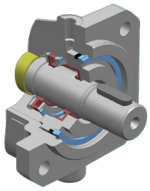

Double radial lip-type seal
for vacuum operation and
connection possibility for quench

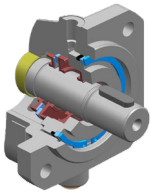

Triple radial lip-type seal without/with
connection possibility for quench

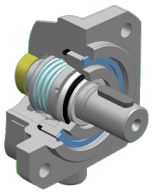

Mechanical seal

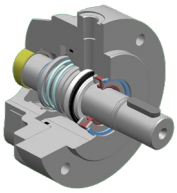

Mechanical seal
and connection possibility for quench

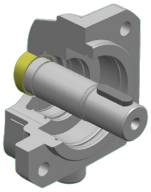

Without shaft sealing

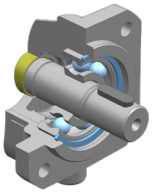

Without shaft sealing with outboard
bearing

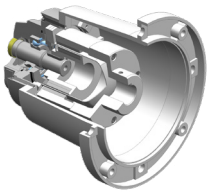

Magnetic coupling

Valves

Valves that can be mounted on gear pumps

Pressure relief valves D / B

Type key ID: D
For nominal sizes 2.5 … 630

Type key ID: B
For nominal sizes 730 … 3150

Gear pumps from the KF low-pressure series can optionally be equipped with a directly controlled pressure relief valve to protect the pump from impermissibly high pressure peaks. The valves have an adjustment option within the defined pressure range and are designed for a brief overflow of the flow rate. Special pressure relief and pressure control valves with an external outlet are available for permanent discharge of a volume flow.

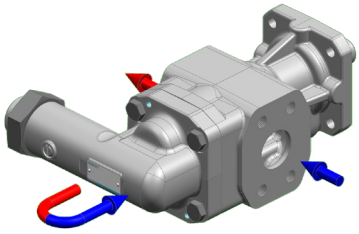

Pressure relief valve T

Type key ID: T
For nominal sizes 32 … 80

The directly controlled pressure relief valve attached to the pump can be used to control the pressure of the pump if the recirculation line on the valve is connected directly to the supply tank. The valve offers good control characteristics and good dynamics with vibration-free operation at all operating points of the pump thanks to customised damping.

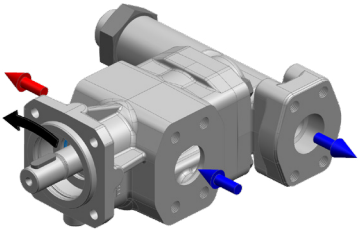

Universal valve U

Type key ID: U
For nominal sizes 32 … 112

Gear pumps with universal valve, which can be installed in any position, deliver to the same connection even when the direction of rotation changes.

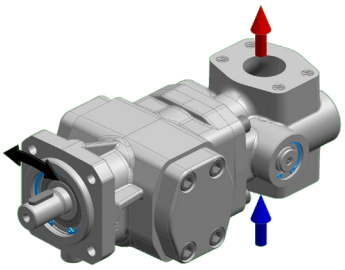

	KF 2.5 … 630	KF 2.5 … 630 MAC	KF-F 2.5 … 630	KF 730 … 3150
Mounted valve ID: D	•	•	•	-
Mounted valve ID: B	-	-	-	•
Mounted valve ID: T	32 … 80	32 … 80	-	-
Mounted valve ID: U	32 … 112	-	-	-

• Available for all nominal sizes

Valves

Valves that can be integrated into pipes

The design of the valves that can be integrated into pipes depends on many factors, such as the pressure, flow rate, medium or viscosity. Our sales engineers will be happy to advise you and find the right solution for your application.

SPV-valve
The SPV-valve is a directly controlled pressure relief valve for installation in pipes and is used to protect hydraulic circuits.

Details: See SPV data sheet

DV-valve
DV-valves are hydraulically pilot operated and available in the following versions:

- Pressure relief valve DV B
- Pressure stage control valve DV S
- Pressure control valve DV R

Details: See DV data sheet

HVF-valve
The HV/HVF pressure relief valve is a pilot operated spool valve for installation in pipes and is therefore used to protect medium pressure hydraulic circuits up to 160 bar.The pipe connection can be made using an SAE flange (3000 psi) or Whitworth pipe thread (G).The spool pilot control means that the valve can also be used for higher viscosities.

Details: See HVF data sheet.

DBD-valve
The pressure relief valve DBD is a directly controlled seat valve for installation in pipes or as a screw-in valve. The valve is used for pressure relief in hydraulic systems up to 400 bar. The housing has two connections with Whitworth pipe threads for line attachment. Without a housing, the valve cartridge can also be screwed into the specified bore contour in any body instead.

Details: See DBD data sheet

Variants / Options

Noise optimisation for media with increased air content (special issue 197)

The noise-optimised versions of the KF low-pressure series are available from nominal size 4 and are designed for pumping media with an increased air content. Special constructional measures significantly reduce the usual increase in noise when conveying air-containing media. The noise levels are not or only insignificantly higher than the noise levels with non-air-containing media. There is also no shift in the noise spectrum towards higher, unpleasant frequencies. If this option is used without air in the medium, the noise values are not reduced. The use of a noise-optimised pump design reduces the flow rate by approx. 3 %.

Note
The noise-optimised version is also available in spheroidal cast iron.
Dimensions conform to standard gear pumps KF

The noise-optimised version of the KF pump is identified by the special number 197 at the end of the type code and the pumps with the special number 197 are built as pumps in combination with an electric motor or as add-on pumps. The pump in combination with an electric motor does not have an attachment bearing and must be driven via a flexible coupling; the add-on pump is equipped with an attachment bearing to absorb external radial forces, such as those that occur when using a flying pinion. Pumps for electric motor operation and add-on pumps are sealed at the shaft end by a radial shaft seal.

Multiple pumps

Properties and versions
- Opposing flow direction possible
- High cold start viscosity possible at high idle speed
- High efficiency over wide speed ranges
- Hydraulically separated

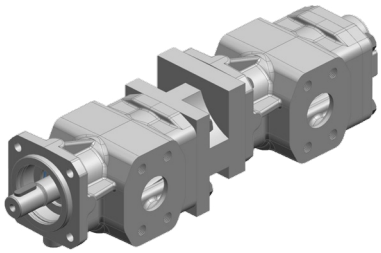

Gear pump KF + Gear pump KF

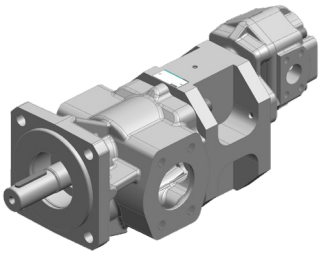

Gear pump KF + High-pressure gear pump KP

Motor-pump units

Motors that can be combined with KF pumps
- Air motors
- Gear motors
- Hydraulic motors (for details, see data sheet KM)
- IEC electric motors in all common efficiency classes (up to IE4)
- Motors in Atex/IECEx design
- Motors with marine approval
- NEMA-motors

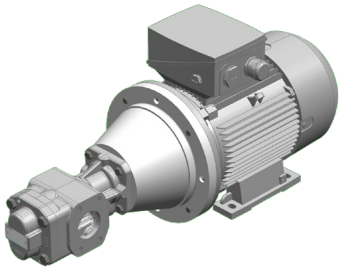

Technical data

General characteristics

Mounting position	KF 2.5 … 630	KF 2.5 … 630 MAC	KF-F 2.5 … 630	KF 730 … 1500	KF 1800 … 3150
Without quench	Any	Any	Any	Any	Any
With quench	Horizontal quench on top	-	-	Horizontal quench on top	Horizontal quench on top
Direction of rotation					
Clockwise or anti-clockwise	•	•	•	•	•
Clockwise and anti-clockwise	•	-	-	•	•
Mounting					
SAE flange	-	-	-	•	•
DIN flange	•	•	•	-	-
Mounting angle	•	•	•	-	-
Hydraulic connection					
Whitworth pipe thread, SAE flange	KF 2.5 … 25	KF 2.5 … 25	KF-F 2.5 … 25	-	-
SAE flange	•	•	•	-	-
Flange connection DN 132 / BCD 180	-	-	-	KF 730 / KF 1000	-
Flange connection DN 160 / BCD 210	-	-	-	KF 1250 / KF 1500	-
Flange connection EN 1092/DN150/PN25	-	-	-	-	KF 1800 / KF 2000
Flange connection EN 1092/DN200/PN25	-	-	-	-	KF 2500 / KF 3150
Shaft seals					
Single radial lip-type seal	•	-	•	•	•
Double radial lip-type seal	•	-	•	•	•
Triple radial lip-type seal	•	-	•	•	•
Mechanical seal	•	-	•	•	•
Magnetic coupling	•	•	•	-	-
Driving shaft end					
Cylindrical with feather key (ISO R 775)	•	•	• (short version)	-	-
Cylindrical Ø 55 mm	-	-	-	•	-
Cylindrical Ø 70 mm	-	-	-	-	•
Optional **Internal thread** **Tapered** **With built-in nozzle** **SAE-/DIN-toothed**	•	•	-	-	-

Technical data

Technical characteristics KF

Nominal size	Geom. displacement in cm^3/rev	Maximum pressure in bar	Speed range in 1/min	Viscosity* in mm^2/s	Maximum sound pressure level in dB (A)			
					5 bar	15 bar	20 bar	25 bar
2.5	2.55	25	200 … 3600	1.4 / 12 … 100 000	65	66	-	67
4	4.03	25	200 … 3600	1.4 / 12 … 100 000	65	66	-	67
5	5.05	25	200 … 3600	1.4 / 12 … 100 000	65	66	-	67
6	6.38	25	200 … 3600	1.4 / 12 … 100 000	65	66	-	67
8	8.05	25	200 … 3600	1.4 / 12 … 100 000	65	66	-	67
10	10.11	25	200 … 3600	1.4 / 12 … 100 000	65	66	-	67
12	12.58	25	200 … 3600	1.4 / 12 … 100 000	65	66	-	67
16	16.09	25	200 … 3600	1.4 / 12 … 100 000	65	66	-	67
20	20.10	25	200 … 3600	1.4 / 12 … 100 000	65	66	-	67
25	25.10	25	200 … 3600	1.4 / 12 … 100 000	65	66	-	67
32	32.12	25	200 … 3600	1.4 / 12 … 100 000	65	66	-	67
40	40.21	25	200 … 3600	1.4 / 12 … 100 000	67	68	-	68
50	50.20	25	200 … 3600	1.4 / 12 … 100 000	67	68	-	68
63	63.18	25	200 … 3600	1.4 / 12 … 100 000	67	68	-	68
80	80.50	25	200 … 3000	1.4 / 12 … 100 000	67	68	-	68
100	101.50	25	200 … 3000	1.4 / 12 … 100 000	67	68	-	69
112	113.50	25	200 … 3000	1.4 / 12 … 100 000	67	68	-	69
125	129.40	25	200 … 3000	1.4 / 12 … 100 000	65	65	-	65
150	155.60	25	200 … 3000	1.4 / 12 … 100 000	65	65	-	65
180	186.60	25	200 … 3000	1.4 / 12 … 100 000	65	65	-	65
200	206.20	25	200 … 2500	1.4 / 12 … 100 000	65	65	-	65
250	245.10	25	200 … 2000	1.4 / 12 … 100 000	75	75	-	75
315	312.90	25	200 … 2000	1.4 / 12 … 100 000	75	75	-	75
400	399.50	25	200 … 2000	1.4 / 12 … 100 000	77	77	-	77
500	496.50	25	200 … 2000	1.4 / 12 … 100 000	77	77	-	77
630	622.50	25	200 … 2000	1.4 / 12 … 100 000	78	78	-	80
730	713.80	25	200 … 2000	1.4 / 12 … 20 000	80	81	-	81
1 000	985.70	25	200 … 2000	1.4 / 12 … 20 000	81	83	-	83
1 250	1236.20	25	200 … 2000	1.4 / 12 … 20 000	83	84	-	86
1 500	1473.00	20	200 … 2000	1.4 / 12 … 20 000	83	85	86	-
1 800	On request							
2 000								
2 500								
3 150								

Notes

* 1.4 … 12 mm^2/s — Reduced maximum pressure
12 mm^2/s … — Maximum pressure possible

Speed restriction KF 32 … 112 with U-valve
Nominal size 32 … 50 — Maximum speed: 3000 1/min
Nominal size 63 … 112 — Maximum speed: 2200 1/min

Radial forces only for version with thrust bearing.
Axial forces are not permitted.

The speed of the pump must be selected so that complete filling of the pump is guaranteed. This is the case if the relative pressure at the pump inlet does not fall below -0.4 bar (temporarily -0.6 bar, e.g. during a cold start).

For certain operating conditions, the specified minimum and maximum parameters are not applicable. For example, the maximum operating pressure is not permissible in conjunction with low speed and low viscosity. Please contact us for such limit ranges.

Sound pressure level measured in dB(A) at a distance of 1 m with drive motor.
Installation location: Workshop
Parameters:
Pump assembly on rigid mounting bracket
Suction and discharge lines = hose measured with gear oil
Viscosity: 34 mm^2/s
Speed: 1500 1/min.

Technical data

Technical characteristics KF-F

Nominal size	Geom. displacement in cm^3/rev	Maximum pressure in bar		Speed range in 1/min	Viscosity in mm^2/s	Maximum sound pressure level in dB (A)		
		Viscosity < 12 mm^2/s	Viscosity ≥ 12 mm^2/s			5 bar	15 bar	25 bar
2.5	2.55	12	25	200 … 3600	1.2 … 20 000	65	66	67
4	4.03	12	25	200 … 3600	1.2 … 20 000	65	66	67
5	5.05	12	25	200 … 3600	1.2 … 20 000	65	66	67
6	6.38	12	25	200 … 3600	1.2 … 20 000	65	66	67
8	8.05	12	25	200 … 3600	1.2 … 20 000	65	66	67
10	10.11	12	25	200 … 3600	1.2 … 20 000	65	66	67
12	12.58	12	25	200 … 3600	1.2 … 20 000	65	66	67
16	16.09	12	25	200 … 3600	1.2 … 20 000	65	66	67
20	20.10	12	25	200 … 3600	1.2 … 20 000	65	66	67
25	25.10	12	25	200 … 3600	1.2 … 20 000	65	66	67
32	32.12	12	25	200 … 3600	1.2 … 20 000	67	68	68
40	40.21	12	25	200 … 3600	1.2 … 20 000	67	68	68
50	50.20	12	25	200 … 3600	1.2 … 20 000	67	68	68
63	63.18	12	25	200 … 3600	1.2 … 20 000	67	68	68
80	80.50	12	25	200 … 3000	1.2 … 20 000	67	68	69
100	101.50	12	25	200 … 3000	1.2 … 20 000	67	68	69
112	113.50	12	25	200 … 3000	1.2 … 20 000	67	68	69
125	129.40	12	25	200 … 3000	1.2 … 20 000	70	70	70
150	155.60	12	25	200 … 3000	1.2 … 20 000	70	70	70
180	186.60	12	25	200 … 3000	1.2 … 20 000	70	70	70
200	206.20	12	25	200 … 2500	1.2 … 20 000	70	70	70
250	245.10	12	25	200 … 2000	1.2 … 20 000	75	75	75
315	312.90	12	25	200 … 2000	1.2 … 20 000	75	75	75
400	399.50	12	25	200 … 2000	1.2 … 20 000	77	77	77
500	496.50	12	25	200 … 2000	1.2 … 20 000	77	77	77
630	622.50	12	25	200 … 2000	1.2 … 20 000	80	80	80

Notes
For certain operating conditions, the specified minimum and maximum parameters are not applicable. For example, the maximum operating pressure is not permissible in conjunction with low speed and low viscosity. Please contact us for such limit ranges.

For fuels, the lubricity must be observed (WSD ≤ 520µm).

Sound pressure level measured in dB(A) at a distance of 1 m with drive motor.
Installation location: Workshop
Parameters:
Pump assembly on rigid mounting bracket
Suction and discharge lines = hose measured with gear oil
Viscosity: 34 mm^2/s
Speed: 1500 1/min.

Technical data

Materials

	Housing and cover	KF 2.5 … 630	KF 2.5 … 630 MAC	KF-F 2.5 … 630	KF 730 … 1500	KF 1800 … 3150
Pump	EN-GJL-250	•	•	-	•	-
	EN-GJS-400-15	•	•	•	•	•
	Gear sets					
	Steel 1.7139	•	•	•	•	•
	Bearing bushes					
	Multi-layer plain bearings	•	•	•	•	•
	Plastic plain bearings	•	•	-	-	-
	White metal plain bearings	•	•	-	-	-
	Materials shaft seals					
	NBR	•	-	-	•	•
	FKM	•	-	•	•	•
	FKM Low temperature	KF 2.5 … 200	-	-	-	-
	Materials O-rings					
	NBR	•	•	-	•	•
	FKM	•	•	•	•	•
	FKM Low temperature	KF 2.5 … 200	-	-	-	-
	Corrosion protection					
	C2m - RAL 7024	•	•	•	•	•
Magnetic coupling	**Inner rotor**					
	Hub: Stainless steel 1.4571 Magnets: SmCo / NdFeB Magnet cover: Stainless steel 1.4571	•	•	•	•	•
	Containment shell					
	MS.46 / MS.60: 1.4571 MS.75 … MS.165: 1.4571 / Hastelloy MS.75 …: PEEK* MS.110 …: Oxide ceramic*	•	•	•	•	•
	Outer rotor					
	Hub: 355J2G3 (St 52) Magnets: SmCo / NdFeB	•	•	•	•	•
Valves	**Housing mounted valve D**					
	EN-GJL-250	•	•	•	-	-
	EN-GJS-400-15	•	•	•	-	-
	Housing mounted valve B					
	EN-GJS-400-15	•	-	-	•	•
	Housing mounted valve T					
	EN-GJS-400-15	32 … 80	32 … 80	-	-	-
	Housing mounted valve U					
	EN-GJS-400-15	2.5 … 112	-	-	-	-

Note
In principle, materials within an assembly (pump / valve) must be selected identically.

Temperatures

Sealing material	Pump	Media temperature in °C	Ambient temperature in °C
FKM	KF 2.5 … 1500	-20 … 150	-20 … 60
	KF 2.5 … 630 MAC	-20 … 150	
	KF-F 2.5 … 630	-20 … 150	
	KF 1800 … 3150	-30 … 150	
NBR	KF 2.5 … 1500	-20 … 90	
	KF 2.5 … 630 MAC	-20 … 90	
	KF 1800 … 3150	-30 … 90	
FKM Low temperature	KF 2.5 … 1500	-30 … 150	-30 … 60
	KF 2.5 … 630 MAC	-30 … 150	
On request	KF 2.5 … 3150	-50 … 200	

Note
Other sealing materials on request.

Technical data

Viscosity-dependent differential pressures

Bearings	Nominal size	Δp_{max} in bar		
		≥ 1.4 mm²/s	≥ 6 mm²/s	≥ 12 mm²/s
Multi-layer plain bearings containing lead	KF 2.5 … 630	3	12	25
	KF 2.5 … 630 MAC	3	12	25
	KF-F 2.5 … 630	3	12	25
	KF 730 … 1250	3	12	25
	KF 1500	3	12	20
	KF 1800 … 3150	3	12	16
Multi-layer plain bearings lead-free	KF 2.5 … 630	3	12	25
	KF 2.5 … 630 MAC	-	-	-
	KF-F 2.5 … 630			
	KF 730 … 1250	3	12	25
	KF 1500	3	12	20
	KF 1800 … 3150	3	12	16
Plastic plain bearings	KF 2.5 … 630	-	6	10
	KF 2.5 … 630 MAC	-	6	10
	KF-F 2.5 … 630	-	-	-
	KF 730 … 1500	-		
	KF 1800 … 3150	-		
White metal plain bearings	KF 2.5 … 630	-	6	10
	KF 2.5 … 630 MAC	-	6	10
	KF-F 2.5 … 630	-	-	-
	KF 730 … 1500	-		
	KF 1800 … 3150	-		

Characteristics of shaft seals KF 2.5 … 3150

Seal type	Sealing material	Maximum speed in 1/min	Suction side pressure in bar (briefly during start-up: -0.6 bar)				
			2.5 … 80	100 … 200	250 … 315	400 … 1500	1800 … 3150
Single radial lip-type seal **Single radial lip-type seal and outboard bearing** **Double radial lip-type seal and connection possibility for quench**	NBR FKM	750	-0.4 … 6.0	-0.4 … 6.0	-0.4 … 5.5	-0.4 … 5.0	On request
		1000	-0.4 … 5.0	-0.4 … 5.0	-0.4 … 4.5	-0.4 … 4.0	
		1500	-0.4 … 4.0	-0.4 … 3.5	-0.4 … 3.0	-0.4 … 2.5	
		2000	-0.4 … 3.0	-0.4 … 2.5	-0.4 … 2.0	-0.4 … 1.5	
		2500	-0.4 … 2.5	-0.4 … 2.0	-	-	
		3000	-0.4 … 2.0	-0.4 … 1.5	-	-	
		3600	-0.4 … 1.5	-	-	-	
	FKM Low temperature	Independent of speed	-0.4 … 0.5		-		
Double radial lip-type seal for vacuum operation and connection possibility for quench	NBR FKM	Independent of speed	-0.9 … 0.2				
Mechanical seal	FKM	Independent of speed	-0.4 … 10.0				
Magnetic coupling	FKM	Independent of speed	-0.9 … 25 depending on pump (only KF 2.5 … 630) and magnetic coupling				

Characteristics of shaft seals KF-F 2.5 … 630

Seal type	Sealing material	Maximum speed in 1/min	Suction side pressure in bar					
			2.5 … 63	80	100 … 180	200	250 … 315	400 … 630
Single radial lip-type seal **Double radial lip-type seal**	FKM	750	-0.4 … 6.0	-0.4 … 6.0	-0.4 … 6.0	-0.4 … 6.0	-0.4 … 5.5	-0.4 … 5.0
		1000	-0.4 … 5.0	-0.4 … 5.0	-0.4 … 5.0	-0.4 … 5.0	-0.4 … 4.5	-0.4 … 4.0
		1500	-0.4 … 4.0	-0.4 … 4.0	-0.4 … 3.5	-0.4 … 3.5	-0.4 … 3.0	-0.4 … 2.5
		2000	-0.4 … 3.0	-0.4 … 3.0	-0.4 … 2.5	-0.4 … 2.5	-0.4 … 2.0	-0.4 … 1.5
		2500	-0.4 … 2.5	-0.4 … 2.5	-0.4 … 2.0	-0.4 … 2.0	-	-
		3000	-0.4 … 2.0	-0.4 … 2.0	-0.4 … 1.5	-	-	-
		3600	-0.4 … 1.5	-	-	-	-	-
Mechanical seal	FKM-O-ring	Independent of speed	-0.4 … 10.0					
Magnetic coupling	FKM-O-ring	Independent of speed	On request					

Note
Other sealing materials on request.

Technical data

Discharge flow and required drive power for speed n = 950 1/min

Discharge flow in l/min

Pressure in bar								Nominal size	Pressure in bar							
2	4	6	8	10	15	20	25		2	4	6	8	10	15	20	25
2.5	2.4	2.4	2.3	2.2	2.1	2.0	1.8	**2.5**	0.03	0.04	0.05	0.06	0.08	0.09	0.11	0.13
3.7	3.7	3.6	3.6	3.6	3.5	3.4	3.3	**4**	0.04	0.05	0.07	0.08	0.09	0.13	0.16	0.20
4.6	4.6	4.5	4.5	4.4	4.2	4.1	3.9	**5**	0.04	0.06	0.08	0.10	0.11	0.16	0.20	0.25
5.8	5.7	5.6	5.5	5.5	5.3	5.1	4.9	**6**	0.05	0.07	0.09	0.12	0.14	0.19	0.25	0.30
7.3	7.3	7.2	7.1	7.0	6.8	6.6	6.4	**8**	0.06	0.09	0.11	0.14	0.17	0.24	0.31	0.38
9.2	9.1	9.0	8.9	8.8	8.5	8.2	7.9	**10**	0.07	0.10	0.14	0.17	0.21	0.29	0.38	0.47
11.4	11.3	11.2	11.1	11.0	10.8	10.5	10.3	**12**	0.08	0.12	0.16	0.21	0.25	0.36	0.47	0.58
14.2	14.0	13.8	13.6	13.4	12.9	12.3	11.8	**16**	0.09	0.15	0.20	0.26	0.31	0.45	0.60	0.74
18.0	17.6	17.3	16.9	16.6	15.7	14.9	14.0	**20**	0.10	0.18	0.25	0.32	0.39	0.56	0.74	0.92
22.8	22.5	22.3	22.0	21.7	21.1	20.4	19.8	**25**	0.12	0.21	0.30	0.39	0.48	0.70	0.92	1.14
29.0	28.0	27.0	27.0	26.0	25.0	23.0	22.0	**32**	0.16	0.30	0.40	0.50	0.60	0.90	1.20	1.50
36.0	36.0	35.0	34.0	34.0	32.0	30.0	28.0	**40**	0.25	0.40	0.50	0.60	0.80	1.10	1.50	1.80
45.0	44.0	43.0	42.0	41.0	39.0	36.0	34.0	**50**	0.30	0.50	0.60	0.80	1.00	1.40	1.90	2.30
57.0	56.0	54.0	53.0	52.0	50.0	46.0	43.0	**63**	0.40	0.60	0.80	1.00	1.20	1.80	2.40	2.90
74.0	73.0	72.0	71.0	70.0	67.0	65.0	62.0	**80**	0.60	0.80	1.10	1.40	1.60	2.30	3.00	3.70
92.0	90.0	88.0	86.0	84.0	79.0	73.0	67.0	**100**	0.70	1.00	1.30	1.60	1.90	2.70	3.60	4.50
102.0	99.0	97.0	94.0	91.0	84.0	77.0	70.0	**112**	0.90	1.20	1.60	2.00	2.40	3.30	4.30	5.20
114.0	112.0	109.0	106.0	103.0	96.0	89.0	82.0	**125**	1.00	1.40	1.80	2.30	2.80	3.90	5.00	6.10
139.0	137.0	134.0	132.0	129.0	123.0	116.0	110.0	**150**	1.10	1.60	2.10	2.60	3.20	4.50	5.80	7.20
169.0	166.0	163.0	160.0	156.0	148.0	140.0	132.0	**180**	1.20	1.80	2.40	3.00	3.60	5.10	6.60	8.10
187.0	184.0	180.0	177.0	174.0	167.0	159.0	151.0	**200**	1.40	2.10	2.80	3.40	4.00	5.70	7.30	9.00
230.0	226.0	223.0	219.0	216.0	209.0	203.0	197.0	**250**	1.50	2.30	3.10	4.00	4.80	6.80	8.90	10.90
295.0	290.0	286.0	282.0	279.0	272.0	265.0	259.0	**315**	2.00	3.00	4.00	5.10	6.10	8.70	11.20	13.80
376.0	369.0	363.0	358.0	353.0	341.0	330.0	320.0	**400**	2.60	3.80	5.10	6.40	7.70	11.00	14.30	17.50
467.0	461.0	454.0	449.0	443.0	430.0	418.0	407.0	**500**	3.30	4.90	6.50	8.10	9.80	13.90	18.00	22.10
587.0	578.0	570.0	562.0	554.0	537.0	523.0	511.0	**630**	4.50	6.60	8.70	10.70	12.80	18.10	23.30	28.60
662.0	643.0	626.0	609.0	594.0	555.0	520.0	486.0	**730**	4.60	6.90	9.20	11.60	14.00	20.00	26.00	32.00
921.0	901.0	886.0	864.0	849.0	801.0	760.0	720.0	**1000**	7.40	9.30	13.70	15.90	20.30	27.20	35.40	43.60
1160.0	1140.0	1121.0	1103.0	1084.0	1041.0	1000.0	961.0	**1250**	8.50	12.60	16.80	20.70	24.90	35.10	45.30	55.60
1389.0	1371.0	1351.0	1335.0	1316.0	1270.0	1229.0	-	**1500**	10.30	15.10	20.00	24.80	29.80	42.00	54.20	-
1710.0	1685.0	1656.0	1634.0	1611.0	1549.0	-	-	**1800**	17.00	23.10	29.10	35.00	40.70	55.60	-	-
1910.0	1882.0	1849.0	1825.0	1799.0	1730.0	-	-	**2000**	19.00	25.80	32.50	39.10	45.40	62.10	-	-
2344.0	2309.0	2270.0	2239.0	2208.0	2123.0	-	-	**2500**	23.30	31.60	39.80	48.00	55.70	76.20	-	-
2946.0	2903.0	2853.0	2815.0	2776.0	2669.0	-	-	**3150**	29.30	39.80	50.10	60.30	70.10	95.80	-	-

Required drive power in kW

Notes
- Scatter range of the flow rate +10 % … -5 % of the table value.
- The characteristics refer to a mineral oil with a viscosity of 34 mm^2/s.
- At a viscosity < 30 mm^2/s, reduce the flow rate.
- The power of the drive motor must be selected 15 % higher than the value in the table.
- For viscosities > 100 mm^2/s , a supplement to the drive power is required.
- For noise-optimised versions, 3 % must be deducted from the flow rate.

Technical data

Discharge flow and required drive power for speed n = 1150 1/min

Discharge flow in l/min

Pressure in bar								Nominal size	Pressure in bar							
2	4	6	8	10	15	20	25		2	4	6	8	10	15	20	25
2.9	2.9	2.8	2.8	2.7	2.6	2.5	2.4	**2.5**	0.03	0.04	0.06	0.08	0.10	0.11	0.13	0.16
4.5	4.5	4.4	4.4	4.4	4.3	4.2	4.1	**4**	0.05	0.06	0.08	0.10	0.11	0.16	0.20	0.24
5.5	5.5	5.4	5.4	5.3	5.2	5.1	4.9	**5**	0.05	0.08	0.10	0.12	0.14	0.20	0.26	0.32
7.0	6.9	6.9	6.8	6.7	6.5	6.3	6.1	**6**	0.06	0.09	0.11	0.14	0.17	0.24	0.31	0.37
8.9	8.9	8.8	8.7	8.6	8.4	8.2	8.0	**8**	0.07	0.11	0.14	0.17	0.21	0.29	0.37	0.46
11.2	11.1	11.0	10.9	10.8	10.5	10.2	9.9	**10**	0.09	0.12	0.17	0.21	0.25	0.35	0.46	0.57
13.9	13.8	13.7	13.6	13.5	13.2	13.0	12.8	**12**	0.10	0.15	0.20	0.25	0.31	0.44	0.57	0.70
17.4	17.2	17.0	16.7	16.5	15.9	15.3	14.8	**16**	0.12	0.19	0.27	0.34	0.41	0.60	0.79	0.98
22.0	21.6	21.2	20.9	20.5	19.6	18.7	17.8	**20**	0.13	0.22	0.31	0.39	0.47	0.68	0.90	1.12
27.8	27.5	27.3	27.0	26.7	26.0	25.3	24.6	**25**	0.17	0.26	0.37	0.48	0.58	0.85	1.12	1.38
35.0	34.0	33.0	33.0	32.0	31.0	29.0	28.0	**32**	0.20	0.40	0.50	0.60	0.80	1.10	1.50	1.80
44.0	44.0	43.0	42.0	42.0	40.0	38.0	36.0	**40**	0.30	0.50	0.70	0.80	1.00	1.40	1.80	2.20
55.0	54.0	53.0	52.0	51.0	49.0	46.0	44.0	**50**	0.40	0.60	0.80	1.00	1.20	1.80	2.30	2.80
69.0	68.0	67.0	66.0	65.0	62.0	59.0	56.0	**63**	0.50	0.80	1.00	1.30	1.50	2.20	2.90	3.50
90.0	89.0	88.0	87.0	86.0	83.0	81.0	79.0	**80**	0.70	1.00	1.40	1.70	2.00	2.80	3.60	4.50
113.0	111.0	109.0	107.0	105.0	100.0	95.0	91.0	**100**	0.90	1.20	1.60	2.00	2.30	3.30	4.40	5.50
126.0	123.0	121.0	118.0	115.0	109.0	103.0	97.0	**112**	1.10	1.50	2.00	2.40	2.90	4.10	5.30	6.40
141.0	138.0	135.0	132.0	129.0	122.0	115.0	108.0	**125**	1.30	1.80	2.20	2.80	3.40	4.70	6.00	7.30
171.0	169.0	166.0	164.0	161.0	155.0	148.0	142.0	**150**	1.50	2.00	2.70	3.20	3.90	5.50	7.00	8.70
207.0	204.0	201.0	198.0	194.0	186.0	178.0	170.0	**180**	1.60	2.40	3.10	3.80	4.50	6.30	8.10	9.90
229.0	226.0	229.0	219.0	216.0	209.0	201.0	193.0	**200**	1.90	2.70	3.50	4.30	5.00	7.10	9.00	11.00
280.0	276.0	273.0	269.0	266.0	259.0	253.0	247.0	**250**	2.10	3.10	4.10	5.10	6.10	8.60	11.10	13.50
359.0	354.0	350.0	346.0	343.0	336.0	329.0	323.0	**315**	2.80	4.10	5.30	6.60	7.80	10.90	14.00	17.20
457.0	451.0	445.0	440.0	435.0	423.0	412.0	402.0	**400**	3.80	5.30	6.90	8.40	10.00	14.00	17.90	21.90
568.0	561.0	555.0	550.0	544.0	532.0	520.0	509.0	**500**	4.90	6.90	8.80	10.70	12.80	17.70	22.70	27.70
713.0	704.0	697.0	689.0	682.0	665.0	652.0	640.0	**630**	6.70	9.20	11.80	14.30	16.80	23.30	29.60	36.10
810.0	791.0	774.0	758.0	743.0	705.0	669.0	636.0	**730**	6.40	9.30	12.20	15.00	17.90	25.20	32.50	39.70
1119.0	1100.0	1084.0	1064.0	1047.0	1005.0	969.0	925.0	**1000**	8.80	12.70	17.40	20.60	24.60	34.30	45.20	54.30
1411.0	1393.0	1376.0	1358.0	1342.0	1300.0	1259.0	1223.0	**1250**	12.70	17.60	22.40	27.60	32.30	44.80	57.20	69.40
1682.0	1666.0	1651.0	1634.0	1616.0	1575.0	1534.0	-	**1500**	15.40	20.50	26.50	32.60	38.40	53.20	68.40	-
2079.0	2056.0	2036.0	2014.0	1987.0	1931.0	-	-	**1800**	25.60	32.80	39.80	47.00	54.30	72.60	-	-
2322.0	2296.0	2274.0	2249.0	2219.0	2156.0	-	-	**2000**	28.60	36.60	44.50	52.50	60.70	81.10	-	-
2850.0	2818.0	2791.0	2760.0	2724.0	2647.0	-	-	**2500**	35.00	44.90	54.60	64.40	74.50	99.50	-	-
3583.0	3543.0	3508.0	3470.0	3424.0	3327.0	-	-	**3150**	44.10	56.50	68.60	81.00	93.60	125.10	-	-

Required drive power in kW

Notes
- Scatter range of the flow rate +10 % … -5 % of the table value.
- The characteristics refer to a mineral oil with a viscosity of 34 mm^2/s.
- At a viscosity < 30 mm^2/s, reduce the flow rate.
- The power of the drive motor must be selected 15 % higher than the value in the table.
- For viscosities > 100 mm^2/s , a supplement to the drive power is required.
- For noise-optimised versions, 3 % must be deducted from the flow rate.

Technical data

Discharge flow and required drive power for speed n = 1450 1/min

Discharge flow in l/min

Pressure in bar								Nominal size	Pressure in bar							
2	4	6	8	10	15	20	25		2	4	6	8	10	15	20	25
3.6	3.6	3.5	3.5	3.5	3.4	3.3	3.2	**2.5**	0.04	0.05	0.08	0.10	0.12	0.14	0.16	0.20
5.7	5.7	5.6	5.6	5.5	5.4	5.4	5.3	**4**	0.06	0.08	0.10	0.12	0.15	0.20	0.25	0.30
6.9	6.8	6.8	6.7	6.7	6.6	6.5	6.4	**5**	0.07	0.10	0.12	0.15	0.19	0.27	0.35	0.43
8.9	8.8	8.8	8.7	8.6	8.4	8.2	8.0	**6**	0.08	0.11	0.15	0.18	0.22	0.32	0.39	0.47
11.3	11.2	11.1	11.0	10.9	10.8	10.6	10.4	**8**	0.09	0.14	0.18	0.22	0.26	0.37	0.47	0.58
14.2	14.1	14.1	13.8	13.7	13.4	13.1	12.8	**10**	0.11	0.16	0.21	0.27	0.32	0.45	0.58	0.72
17.6	17.5	17.4	17.3	17.2	16.9	16.7	16.5	**12**	0.12	0.19	0.26	0.32	0.39	0.55	0.72	0.89
22.2	21.9	21.7	21.4	21.2	20.5	19.9	19.3	**16**	0.16	0.26	0.37	0.47	0.57	0.82	1.08	1.33
27.9	27.5	27.1	26.8	26.4	25.5	24.5	23.6	**20**	0.17	0.28	0.39	0.49	0.60	0.87	1.14	1.41
35.3	35.0	34.7	34.4	34.1	33.3	32.6	31.8	**25**	0.24	0.34	0.47	0.61	0.74	1.08	1.41	1.75
45.0	44.0	43.0	43.0	42.0	41.0	39.0	37.0	**32**	0.30	0.50	0.70	0.80	1.00	1.40	1.90	2.30
57.0	56.0	55.0	55.0	54.0	52.0	50.0	48.0	**40**	0.40	0.60	0.90	1.10	1.30	1.80	2.30	2.90
70.0	69.0	68.0	67.0	66.0	64.0	61.0	58.0	**50**	0.50	0.80	1.10	1.30	1.60	2.30	2.90	3.60
88.0	87.0	86.0	85.0	84.0	81.0	78.0	75.0	**63**	0.70	1.00	1.30	1.70	2.00	2.90	3.70	4.50
114.0	113.0	112.0	111.0	110.0	107.0	105.0	103.0	**80**	0.90	1.40	1.80	2.20	2.60	3.60	4.60	5.70
144.0	142.0	140.0	138.0	137.0	131.0	128.0	126.0	**100**	1.20	1.60	2.00	2.50	3.00	4.30	5.70	7.00
161.0	159.0	157.0	154.0	152.0	147.0	142.0	138.0	**112**	1.40	2.00	2.60	3.10	3.70	5.20	6.70	8.20
181.0	178.0	175.0	172.0	169.0	162.0	155.0	147.0	**125**	1.70	2.30	2.90	3.60	4.20	5.80	7.40	9.00
218.0	216.0	213.0	211.0	209.0	203.0	197.0	191.0	**150**	2.00	2.70	3.50	4.20	5.00	6.90	8.90	11.00
264.0	261.0	257.0	254.0	251.0	242.0	234.0	226.0	**180**	2.30	3.20	4.10	5.00	5.90	8.20	10.40	12.70
293.0	290.0	287.0	283.0	280.0	272.0	264.0	256.0	**200**	2.60	3.60	4.60	5.60	6.60	9.10	11.60	14.00
356.0	352.0	348.0	344.0	341.0	334.0	327.0	321.0	**250**	3.10	4.30	5.60	6.80	8.10	11.20	14.30	17.40
455.0	450.0	446.0	442.0	439.0	431.0	424.0	418.0	**315**	4.10	5.70	7.20	8.80	10.40	14.30	18.30	22.20
579.0	573.0	567.0	562.0	557.0	545.0	535.0	524.0	**400**	5.60	7.50	9.50	11.50	13.50	18.40	23.40	28.50
719.0	712.0	707.0	701.0	696.0	684.0	673.0	662.0	**500**	7.40	9.80	12.20	14.70	17.20	23.40	29.70	36.10
902.0	894.0	887.0	880.0	874.0	858.0	845.0	834.0	**630**	10.10	13.20	16.40	19.60	22.90	31.00	39.10	47.40
1029.0	1012.0	995.0	980.0	966.0	930.0	896.0	862.0	**730**	10.40	14.00	17.60	21.20	24.80	34.00	43.10	52.50
1413.0	1399.0	1383.0	1367.0	1351.0	1314.0	1273.0	1236.0	**1000**	14.60	19.50	24.50	29.50	34.60	47.90	59.50	71.80
1783.0	1765.0	1750.0	1735.0	1720.0	1682.0	1644.0	1609.0	**1250**	21.10	26.90	33.20	39.70	45.80	61.30	77.20	92.30
2130.0	2116.0	2101.0	2087.0	2072.0	2034.0	1998.0	-	**1500**	24.30	31.60	39.30	46.90	54.20	73.00	91.70	-
2629.0	2616.0	2586.0	2571.0	2555.0	2509.0	-	-	**1800**	42.30	50.80	60.90	69.60	79.00	100.90	-	-
2936.0	2921.0	2888.0	2871.0	2853.0	2803.0	-	-	**2000**	47.30	56.70	68.00	77.70	88.30	112.70	-	-
3603.0	3585.0	3545.0	3524.0	3502.0	3440.0	-	-	**2500**	58.00	69.60	83.50	95.40	108.30	138.30	-	-
4529.0	4507.0	4456.0	4430.0	4402.0	4324.0	-	-	**3150**	72.90	87.50	104.90	119.90	136.20	173.80	-	-

Required drive power in kW

Notes
- Scatter range of the flow rate +10 % … -5 % of the table value.
- The characteristics refer to a mineral oil with a viscosity of 34 mm^2/s.
- At a viscosity < 30 mm^2/s, reduce the flow rate.
- The power of the drive motor must be selected 15 % higher than the value in the table.
- For viscosities > 100 mm^2/s , a supplement to the drive power is required.
- For noise-optimised versions, 3 % must be deducted from the flow rate.

Technical data

Discharge flow and required drive power for speed n = 1750 1/min

Discharge flow in l/min								Nominal size	Required drive power in kW							
Pressure in bar									Pressure in bar							
2	4	6	8	10	15	20	25		2	4	6	8	10	15	20	25
4.3	4.3	4.2	4.2	4.3	4.2	4.1	4.0	**2.5**	0.05	0.06	0.10	0.12	0.14	0.17	0.19	0.24
6.9	6.9	6.8	6.8	6.6	6.5	6.6	6.5	**4**	0.07	0.10	0.12	0.14	0.19	0.24	0.3	0.36
8.3	8.1	8.2	8.0	8.1	8.0	7.9	7.9	**5**	0.09	0.12	0.14	0.18	0.24	0.34	0.44	0.54
10.8	10.7	10.7	10.6	10.5	10.3	10.1	9.9	**6**	0.10	0.13	0.19	0.22	0.27	0.40	0.47	0.57
13.7	13.5	13.4	13.3	13.2	13.2	13.0	12.8	**8**	0.11	0.17	0.22	0.27	0.31	0.45	0.57	0.70
17.2	17.1	17.2	16.7	16.6	16.3	16.0	15.7	**10**	0.13	0.20	0.25	0.33	0.39	0.55	0.70	0.87
21.3	21.2	21.1	21.0	20.9	20.6	20.4	20.2	**12**	0.14	0.23	0.32	0.39	0.47	0.66	0.87	1.08
27.0	26.6	26.4	26.1	25.9	25.1	24.5	23.8	**16**	0.20	0.33	0.47	0.60	0.73	1.04	1.37	1.68
33.8	33.4	33.0	32.7	32.3	31.4	30.3	29.4	**20**	0.21	0.34	0.47	0.59	0.73	1.06	1.38	1.70
42.8	42.5	42.1	41.8	41.5	40.6	39.9	39.0	**25**	0.31	0.42	0.57	0.74	0.90	1.31	1.70	2.12
55.0	54.0	53.0	53.0	52.0	51.0	49.0	46.0	**32**	0.40	0.60	0.90	1.00	1.20	1.70	2.30	2.80
70.0	68.0	67.0	68.0	66.0	64.0	62.0	60.0	**40**	0.50	0.70	1.10	1.40	1.60	2.20	2.80	3.60
85.0	84.0	83.0	82.0	81.0	79.0	76.0	72.0	**50**	0.60	1.00	1.40	1.60	2.00	2.80	3.50	4.40
107.0	106.0	105.0	104.0	103.0	100.0	97.0	94.0	**63**	0.90	1.20	1.60	2.10	2.50	3.60	4.50	5.50
138.0	137.0	136.0	135.0	134.0	131.0	129.0	127.0	**80**	1.10	1.70	2.20	2.70	3.20	4.40	5.60	6.90
175.0	173.0	171.0	169.0	169.0	162.0	162.0	161.0	**100**	1.50	2.00	2.40	3.00	3.70	5.30	7.00	8.50
196.0	195.0	193.0	190.0	189.0	185.0	181.0	179.0	**112**	1.70	2.50	3.20	3.80	4.50	6.30	8.10	10.00
221.0	218.0	215.0	212.0	209.0	202.0	195.0	186.0	**125**	2.10	2.80	3.60	4.40	5.00	6.90	8.80	10.70
265.0	263.0	260.0	258.0	257.0	251.0	246.0	240.0	**150**	2.50	3.40	4.30	5.20	6.10	8.30	10.80	13.30
321.0	318.0	313.0	310.0	308.0	298.0	290.0	282.0	**180**	3.00	4.00	5.10	6.20	7.30	10.10	12.70	15.50
357.0	354.0	351.0	347.0	344.0	335.0	327.0	319.0	**200**	3.30	4.50	5.70	6.90	8.20	11.10	14.20	17.00
432.0	428.0	423.0	419.0	416.0	409.0	401.0	395.0	**250**	4.10	5.50	7.10	8.50	10.10	13.80	17.50	21.30
551.0	546.0	542.0	538.0	535.0	526.0	519.0	513.0	**315**	5.40	7.30	9.10	11.00	13.00	17.70	22.60	27.20
701.0	695.0	689.0	684.0	679.0	667.0	658.0	646.0	**400**	7.40	9.70	12.10	14.60	17.00	22.80	28.90	31.50
870.0	863.0	859.0	852.0	848.0	836.0	826.0	815.0	**500**	9.90	12.70	15.60	18.70	21.60	29.10	36.70	44.50
1091.0	1084.0	1077.0	1071.0	1066.0	1051.0	1038.0	1028.0	**630**	13.50	17.20	21.00	24.90	29.00	38.70	48.60	58.70
1247.0	1230.0	1214.0	1200.0	1187.0	1152.0	1120.0	1087.0	**730**	15.90	20.10	24.40	28.80	33.00	44.10	55.00	66.30
1711.0	1697.0	1682.0	1667.0	1653.0	1620.0	1582.0	1547.0	**1000**	22.30	28.20	34.20	40.10	46.30	62.40	76.10	91.20
2150.0	2135.0	2124.0	2111.0	2097.0	2062.0	2029.0	1995.0	**1250**	31.40	38.80	46.40	53.90	61.80	80.90	99.30	117.90
2568.0	2556.0	2543.0	2531.0	2519.0	2488.0	2457.0	-	**1500**	37.40	46.40	55.10	64.00	73.50	96.60	117.40	-

Notes
- Scatter range of the flow rate +10 % … -5 % of the table value.
- The characteristics refer to a mineral oil with a viscosity of 34 mm^2/s.
- At a viscosity < 30 mm^2/s, reduce the flow rate.
- The power of the drive motor must be selected 15 % higher than the value in the table.
- For viscosities > 100 mm^2/s , a supplement to the drive power is required.
- For noise-optimised versions, 3 % must be deducted from the flow rate.

Type key KF

Pump																							Mounted valve							
KF	80	2	F	1	0	A	2	Z	D	2	0	0	G	G	E	0	G	X	D	/	197	+	D	2	F	2	X	15	/	001
1	2	3	4	5	6	7	8	9	10	11	12	13	14	15	16	17	18	19	20		21		22	23	24	25	26	27		28

1 Product	
KF	Low-pressure gear pump

2 Nominal size
2.5 · 4 · 5 · 6 · 8 · 10 · 12 · 16 · 20 · 25 · 32 · 40 · 50 · 63 · 80 · 100 · 112 · 125 · 150 · 180 · 200 · 250 · 315 · 400 · 500 · 630 · 730 · 1000 · 1250 · 1500 · 1800 · 2000 · 2500 · 3150

3 Housing material	
2	EN-GJS-400-15
6	EN-GJL-250

4 Sealing material	
C	CR
E	EPDM
F	FKM
G	FFKM
H	HNBR
L	FKM Low temperature
N	NBR
P	FEP
Q	PTFE

5 Direction of rotation		Direction of delivery
1	Clockwise	Right
2	Anti-clockwise	Left
3	Clockwise and anti-clockwise	Right and left
4	Clockwise and anti-clockwise	One direction (only in conjunction with valve U)

6 Outboard bearing	
0	Without
V	With

7 Flange type			Nominal size
A	Four-hole flange	DIN ISO 3019	2.5 … 80 / 250 … 630
B	Four-hole flange	Base DIN ISO 3019	100 … 200
	SAE connections on request		

8 Flange cover material	
0	Without
2	EN-GJS-400-15
6	EN-GJL-250

9 Shaft end		Nominal size
Z	Cylindrical shaft end	2.5 … 3150
E	Cylindrical shaft end with centring hole to DIN 332	2.5 … 630
	Splined shaft profiles on request	

10 Type of ending	
D	Cover
V	Valve

11 Cover material	
0	Without (only at 10: **V**)
2	EN-GJS-400-15
6	EN-GJL-250

12 2. Shaft end	
0	Without
1	With

13 Axial clearance compensation	
0	Without

14 Suction side connection			Standard	Option
A	Whitworth pipe thread G³/₄		2.5 … 12	-
	Whitworth pipe thread G1		16 … 25	-
B	Flange connection	DN132/BCD180	730 … 1000	-
	Flange connection	DN160/BCD210	1250 … 1500	-
	Flange connection		1800 … 3150	-
C	SAE ³/₄″	M10 - 15 deep	2.5 … 12	-
D	SAE 1″	M10 - 17 deep	-	16 … 25
G	SAE 1¹/₂″	M12 - 20 deep	32 … 80	-
I	SAE 2″	M12 - 20 deep	100 … 112	50 … 80
J	SAE 2¹/₂″	M12 - 20 deep	125 … 150	100 … 112
L	SAE 3″	M16 - 32 deep	180 … 315	125 … 150
M	SAE 3¹/₂″	M16 - 32 deep	-	180 … 315
N	SAE 4″	M16 - 32 deep	400 … 630	-
P	SAE 5″	M16 - 32 deep	-	400 … 630

15 Pressure side connection			Standard	Option
A	Whitworth pipe thread G³/₄		2.5 … 12	-
	Whitworth pipe thread G1		16 … 25	-
B	Flange connection	DN132/BCD180	730 … 1000	-
	Flange connection	DN160/BCD210	1250 … 1500	-
	Flange connection		1800 … 3150	-
C	SAE ¾″	M10 - 15 deep	2.5 … 12	-
D	SAE 1″	M10 - 17 deep	-	16 … 25
G	SAE 1¹/₂″	M12 - 20 deep	32 … 80	-
I	SAE 2″	M12 - 20 deep	100 … 112	50 … 80
J	SAE 2¹/₂″	M12 - 20 deep	125 … 150	100 … 112
L	SAE 3″	M16 - 32 deep	180 … 315	125 … 150
M	SAE 3¹/₂″	M16 - 32 deep	-	180 … 315
N	SAE 4″	M16 - 32 deep	400 … 630	-
P	SAE 5″	M16 - 32 deep	-	400 … 630

16 Gear sets material		Nominal size
E	Case-hardening steel 16MnCrS5 - 1.7139	2.5 … 630
B	Alloyed heat-treated steel 42CrMo4V - 1.7225	730 … 3150

17 Gear sets coating	
0	Without

18 Bearing type	
G	Plain bearing

19 Bearing material	
D	Multi-layer plain bearings (leaded)
E	Multi-layer plain bearings (lead-free)
X	Plastic plain bearing

20 Seal type	
0	Without
W	Single radial lip-type seal
D	Double radial lip-type seal without quench connection
E	Double radial lip-type seal with quench connection
F	Triple radial lip-type seal without quench connection
G	Triple radial lip-type seal with quench connection
H	Mechanical seal
J	Mechanical seal with pre-mounted radial lip-type seal and quench connection
M	Magnetic coupling with flushing
N	Magnetic coupling without flushing

21 Special number	
0	Without
197	Noise-optimised for media with increased air content
503	Noise-optimised for media with increased air content and pressure lubrication

Mounted valve see next page

Notes
Materials within an assembly (pump and valve) and connections (suction and discharge side) must always be selected identically.
Atex on request.

Type key KF (mounted valve)

Pump																							Mounted valve								
KF	80	2	F	1	0	A	2	Z	D	2	0	0	G	G	E	0	G	X	D	/	197	+	D	2	F	2	X	15	/	00.
1	2	3	4	5	6	7	8	9	10	11	12	13	14	15	16	17	18	19	20		21		22	23	24	25	26	27		28

22 Valve	23 KF size	24 Seal	25 Housing material	26 Bearing bush	27 Pressure stage	28 Special number
D	**1** 2.5 … 25 **2** 32 … 80 **3** 100 … 112 **4** 125 … 200 **5** 250 … 315 **6** 400 … 630	**C** CR **E** EPDM **F** FKM **G** FFKM **H** HNBR **L** FKM Low temp. **N** NBR **P** FEP **Q** PTFE	**6** EN-GJL-250 **2** EN-GJS-400-15	**D** Multi-layer plain bearings (leaded) **E** Multi-layer plain bearing (lead-free) **X** Plastic plain bearing	**15** 1 … 15 bar **25** 15 … 25 bar **30** 15 … 30 bar	Without **00.** On request
B	**7** 730 … 1500 **8** 1800 … 3150	**F** FKM **N** NBR **H** HNBR **C** CR	**2** EN-GJS-400-15	**D** Multi-layer plain bearings (leaded) **E** Multi-layer plain bearing (lead-free) **X** Plastic plain bearing	**25** 3 … 25 bar	
R	**1** 2.5 … 25 **2** 32 … 80 **7** 730 … 1500 **8** 1800 … 3150	**F** FKM **N** NBR **H** HNBR **C** CR	**2** EN-GJS-400-15	**D** Multi-layer plain bearings (leaded) **E** Multi-layer plain bearing (lead-free) **X** Plastic plain bearing	**09** 3 … 9 bar **12** 3 … 12 bar	
T	**2** 32 … 80	**N** NBR **F** FKM	**2** EN-GJS-400-15	**D** Multi-layer plain bearings (leaded) **E** Multi-layer plain bearing (lead-free) **X** Plastic plain bearing	**15** 1 … 15 bar **25** 15 … 25 bar	Without **00.** On request
U	**2** 32 … 80 **3** 100 … 112	**N** NBR **F** FKM **P** FEP	**2** EN-GJS-400-15	**D** Multi-layer plain bearings (leaded) **E** Multi-layer plain bearing (lead-free) **X** Plastic plain bearing	**00** Not defined	12 … 300 mm^2/s **002** 300 … 1 000 mm^2/s **003** 1 000 … 10 000 mm^2/s

Notes
Materials within an assembly (pump and valve) and connections (suction and discharge side) must always be selected identically.
Atex on request.

Type key KF-F

Pump																							Mounted valve							
KF-F	80	2	F	1	0	A	0	Z	D	2	0	0	G	G	E	0	G	D	E	/	00.	+	D	2	F	2	D	15	/	00.
1	2	3	4	5	6	7	8	9	10	11	12	13	14	15	16	17	18	19	20		21		22	23	24	25	26	27		28

1 Product	
KF-F	Low-pressure gear pump especially for fuel applications

2 Nominal size
2.5 · 4 · 5 · 6 · 8 · 10 · 12 · 16 · 20 · 25 · 32 · 40 · 50 · 63 · 80 · 100 · 112 · 125 · 150 · 180 · 200 · 250 · 315 · 400 · 500 · 630

3 Housing material	
2	EN-GJS-400-15

4 Sealing material	
F	FKM

5 Direction of rotation		Direction of delivery
1	Clockwise	Right
2	Anti-clockwise	Left
3	Clockwise and anti-clockwise	Right and left

6 Outboard bearing	
0	Without
V	With

7 Flange type			Nominal size
A	Four-hole flange	DIN ISO 3019	2.5 … 80 / 250 … 630
B	Four-hole flange	Base DIN ISO 3019	100 … 200
	SAE connections on request		

8 Flange cover material	
0	Without

9 Shaft end	
Z	Cylindrical shaft end

10 Type of ending	
0	Without
D	Cover
V	Valve

11 Cover material	
0	Without
2	EN-GJS-400-15 (only at 10: D)

12 2. Shaft end	
0	Without

13 Axial clearance compensation	
0	Without

14 Suction side connection			Standard	Option
A	Whitworth pipe thread G3/4		2.5 … 12	
	Whitworth pipe thread G1		16 … 25	
C	SAE 3/4″	M10 - 15 deep	2.5 … 12	-
D	SAE 1″	M10 - 17 deep	-	16 … 25
G	SAE 1 1/2″	M12 - 20 deep	32 … 80	-
I	SAE 2″	M12 - 20 deep	100 … 112	50 … 80
J	SAE 2 1/2″	M12 - 20 deep	125 … 150	100 … 112
L	SAE 3″	M16 - 32 deep	180 … 315	125 … 150
M	SAE 3 1/2″	M16 - 32 deep	-	180 … 315
N	SAE 4″	M16 - 32 deep	400 … 630	-
P	SAE 5″	M16 - 32 deep	-	400 … 630

15 Pressure side connection			Standard	Option
A	Whitworth pipe thread G3/4		2.5 … 12	
	Whitworth pipe thread G1		16 … 25	
C	SAE 3/4″	M10 - 15 deep	2.5 … 12	-
D	SAE 1″	M10 - 17 deep	-	16 … 25
G	SAE 1 1/2″	M12 - 20 deep	32 … 80	-
I	SAE 2″	M12 - 20 deep	100 … 112	50 … 80
J	SAE 2 1/2″	M12 - 20 deep	125 … 150	100 … 112
L	SAE 3″	M16 - 32 deep	180 … 315	125 … 150
M	SAE 3 1/2″	M16 - 32 deep	-	180 … 315
N	SAE 4″	M16 - 32 deep	400 … 630	-
P	SAE 5″	M16 - 32 deep	-	400 … 630

16 Gear sets material	
E	Case-hardening steel 16MnCrS5 - 1.7139

17 Gear sets coating	
0	Without

18 Bearing type	
G	Plain bearing

19 Bearing material	
D	Multi-layer plain bearings (leaded)

20 Seal type	
W	Single radial lip-type seal
E	Double radial lip-type seal and quench connection
H	Mechanical seal
M	Magnetic coupling with flushing

21 Special number	
	Without
00.	On request

22 Mounted valve	
D	Pressure relief valve

23 KF size	
1	2.5 … 25
2	32 … 80
3	100 … 112
4	125 … 200
5	250 … 315
6	400 … 630

24 Seal	
F	FKM

25 Housing material	
2	EN-GJS-400-15

26 Bearing bush	
D	Multi-layer plain bearings (leaded)

27 Pressure stage	
15	1 … 15 bar
25	15 … 25 bar
30	15 … 30 bar

28 Special number	
	Without
00.	On request

Notes
Materials within an assembly (pump and valve) and connections (suction and discharge side) must always be selected identically.
Atex on request.

Atex version

Permitted areas of application

Depending on the labeling, our explosion-proof pump versions in accordance with directive 2014/34/EU may be used as follows:

1. In the zone 2 (Gas-Ex, category 3G) in the explosion groups IIA, IIB und IIC

2. In the zone 22 (Dust-Ex, category 3D) in the explosion groups IIIA und IIIB

3. In the zone 1 (Gas-Ex, category 2G) in the explosion groups IIA, IIB und IIC

4. In the zone 21 (Dust-Ex, category 2D) in the explosion groups IIIA und IIIB

Characteristics

Nominal size	KF KF-F	2.5 … 1500 2.5 … 630	
Working pressure suction side	-0.4 … 0.5 bar		
Working pressure pressure side	25 bar		
Differential pressure	See table differential pressure (Page 15)		
Mounting position	Horizontal or shaft end down, Versions with connection for horizontal liquid supply. Vertical installation with shaft end on top (Special number 277).		
Ambient temperature	NBR FKM	-20 … 60 °C -15 … 60 °C	
Media temperature	NBR FKM FKM	-20 … 80 °C -15 … 80 °C -15 … 110 °C	(T4) (T4) (T3)
Device temperature	NBR FKM	-20 … 80 °C -15 … 130 °C	(T4) (T3/T4)

The maximum temperatures must not be exceeded. An application-dependent self-heating of the devices must be taken into account.

Consultancy
For expert advice, please get in touch with your contact person in the sales department or give us a call (+49 2392.935 0).

Dimensions and weights

KF / KF-F 2.5 … 25 with pipe thread

Version with housing cover

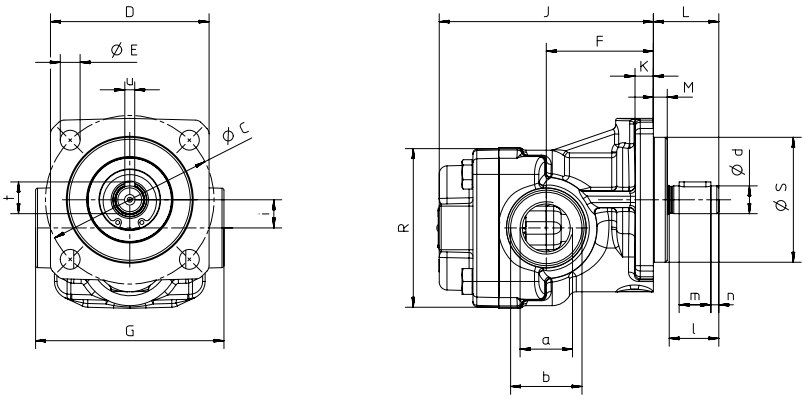

Version with pressure relief valve (type code ID: D)

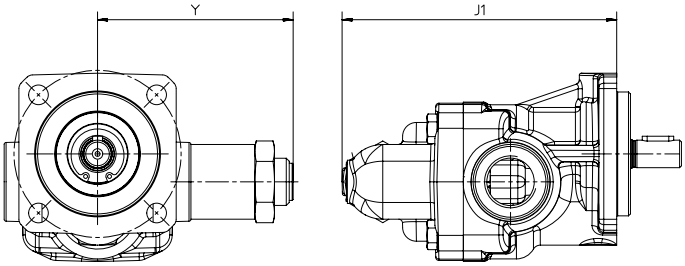

Nominal size	Suction and pressure connection		Housing														Shaft end						Weight	
	a	b	C	D	E	F	G	J	J1	K	L	M	R	S_{h8}	i	Y	d_{j6}	l	m	n	t	u	without valve	with valve
2.5 … 12	G3/4	Ø 36	85	80	10	54	95	108	140	9	33	7	80	63	14.2	100	14	25	16	4	16	5	2.9	3.7
16 … 25	G1 - 19 deep	Ø 42	85	80	10	63	95	130	162	9	33	7	80	63	14.2	100	14	25	16	4	16	5	3.5	4.3

Dimensions in mm / Weights in kg

Dimensions and weights

KF / KF-F 2.5 … 630 with SAE connection

Version with housing cover

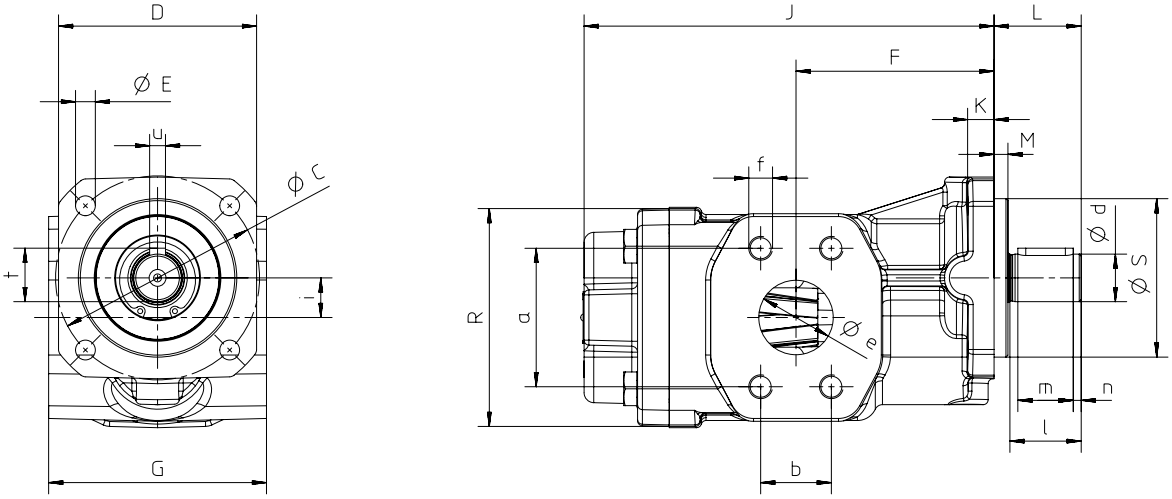

Version with pressure relief valve (type code ID: D)

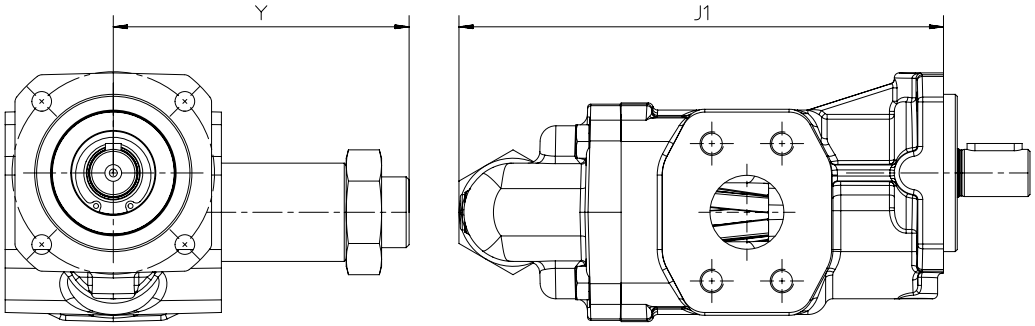

Nominal size	SAE	Suction and pressure connection				Housing														Shaft end						Weight	
		a	b	e	f	C	D	E	F	G	J	J1	K	L	M	R	S_{h8}	i	Y	d_{j6}	l	m	n	t	u	without valve	with valve
2.5 … 12	³/₄″	47.6	22.2	19.5	M10-15 deep	85	80	10	54	100	108.0	140.0	9	33	7	80	63	14.2	99.5	14	25	16	4	16	5	4.2	5.0
16 … 25	1″	52.4	26.2	25.0	M10-17 deep	85	80	10	63	100	130.0	162.0	9	33	7	80	63	14.2	99.5	14	25	16	4	16	5	4.8	5.6
32 … 50	1¹/₂″	69.9	35.7	38.0	M12-20 deep	103	100	10	84	110	172.0	211.5	13	44	7	110	80	20.0	150.5	24	36	28	4	27	8	7.7	9.5
50	2″	77.8	42.9	50.0	M12-20 deep	103	100	10	84	110	172.0	211.5	13	44	7	110	80	20.0	150.5	24	36	28	4	27	8	7.7	9.5
63/80	1¹/₂″	69.9	35.7	38.0	M12-20 deep	103	100	10	100	110	207.0	246.5	13	44	7	110	80	20.0	150.5	24	36	28	4	27	8	9.4	11.2
63/80	2″	77.8	42.9	50.0	M12-20 deep	103	100	10	100	110	207.0	246.5	13	44	7	110	80	20.0	150.5	24	36	28	4	27	8	9.4	11.2
100/112	2″	77.8	42.9	50.8	M12-20 deep	145	135	14	102	130	220.5	262.5	17	60	8	128	110	23.7	170.5	28	50	40	5	31	8	16.0	18.7
100/112	2¹/₂″	88.9	50.8	63.5	M12-20 deep	145	135	14	102	130	220.5	262.5	17	60	8	128	110	23.7	170.5	28	50	40	5	31	8	16.0	18.7
125/150	2¹/₂″	88.9	50.8	63.5	M12-20 deep	145	135	14	120	150	245.0	282.0	18	60	8	159	110	23.7	170.5	28	50	40	5	31	8	22.2	24.9
125/150	3″	106.4	61.9	76.2	M16- 32 deep	145	135	14	120	150	245.0	282.0	18	60	8	159	110	23.7	170.5	28	50	40	5	31	8	22.2	24.9
180/200	3″	106.4	61.9	76.2	M16- 32 deep	145	135	14	130	150	261.5	298.5	18	60	8	159	110	23.7	170.5	28	50	40	5	31	8	24.8	27.5
180/200	3¹/₂″	120.7	69.9	88.9	M16- 32 deep	145	135	14	130	150	261.5	298.5	18	60	8	159	110	23.7	170.5	28	50	40	5	31	8	24.8	27.5
250/315	3″	106.4	61.9	76.2	M16- 32 deep	200	185	19	155	200	311.0	364.0	26	90	8	208	160	35.5	240.0	38	80	63	8	41	10	44.2	47.6
400/500	4″	130.2	77.8	101.6	M16- 32 deep	200	185	19	200	200	373.0	426.0	26	90	8	208	160	35.5	240.0	38	80	63	8	41	10	54.7	58.2
630	4″	130.2	77.8	101.6	M16- 32 deep	200	185	19	200	200	417.0	470.0	26	90	8	208	160	35.5	240.0	38	80	63	8	41	10	60.8	64.2

Dimensions in mm / Weights in kg

Dimensions and weights

Mounting angle for KF / KF-F 2.5 … 25

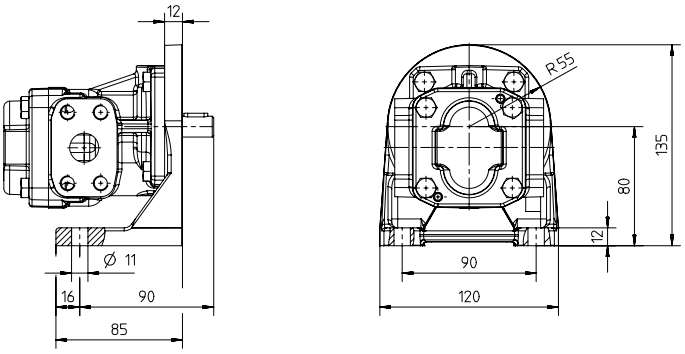

Mounting angle for KF / KF-F 32 … 80

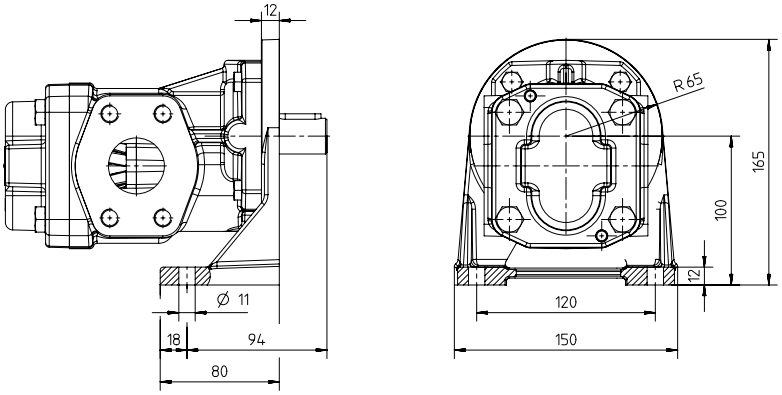

Mounting angle for KF / KF-F 100 … 200

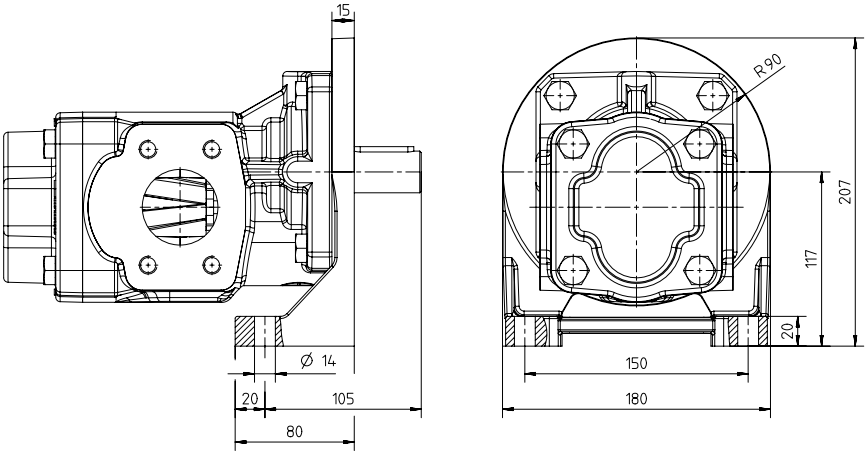

Dimensions in mm

Dimensions and weights

KF / KF-F 32 … 80 with universal valve (type code ID: U)

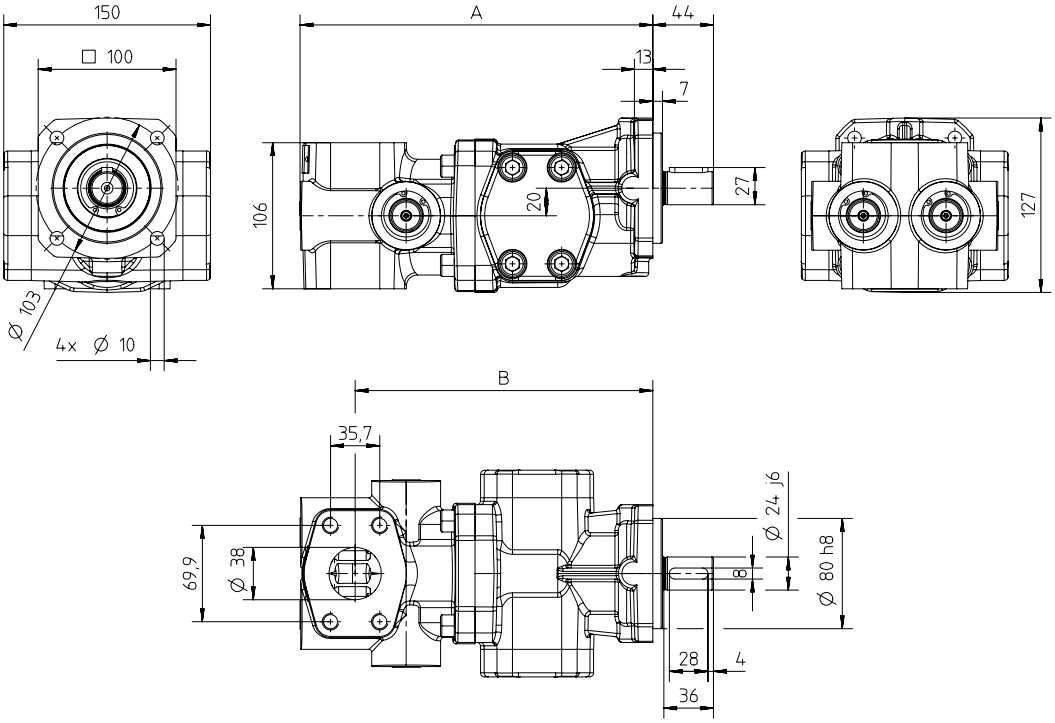

KF / KF-F 100/112 with universal valve (type code ID: U)

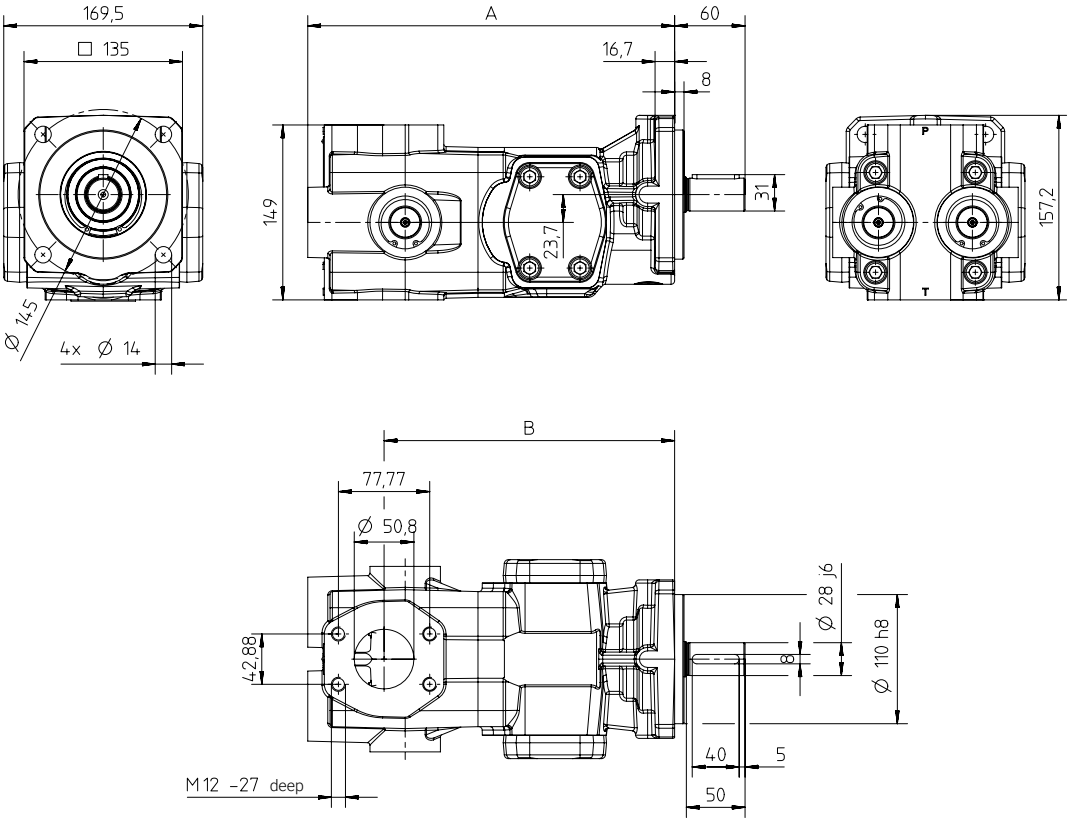

Nominal size	A	B	Weight
32 … 50	256.0	216.0	15.5
63 / 80	291.0	251.0	17.5
100 / 112	312.5	247.5	21.6

Schematic diagram

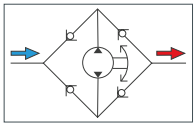

Dimensions in mm / Weights in kg

Dimensions and weights

KF / KF-F 32 … 80 with T-valve (type code ID: T)

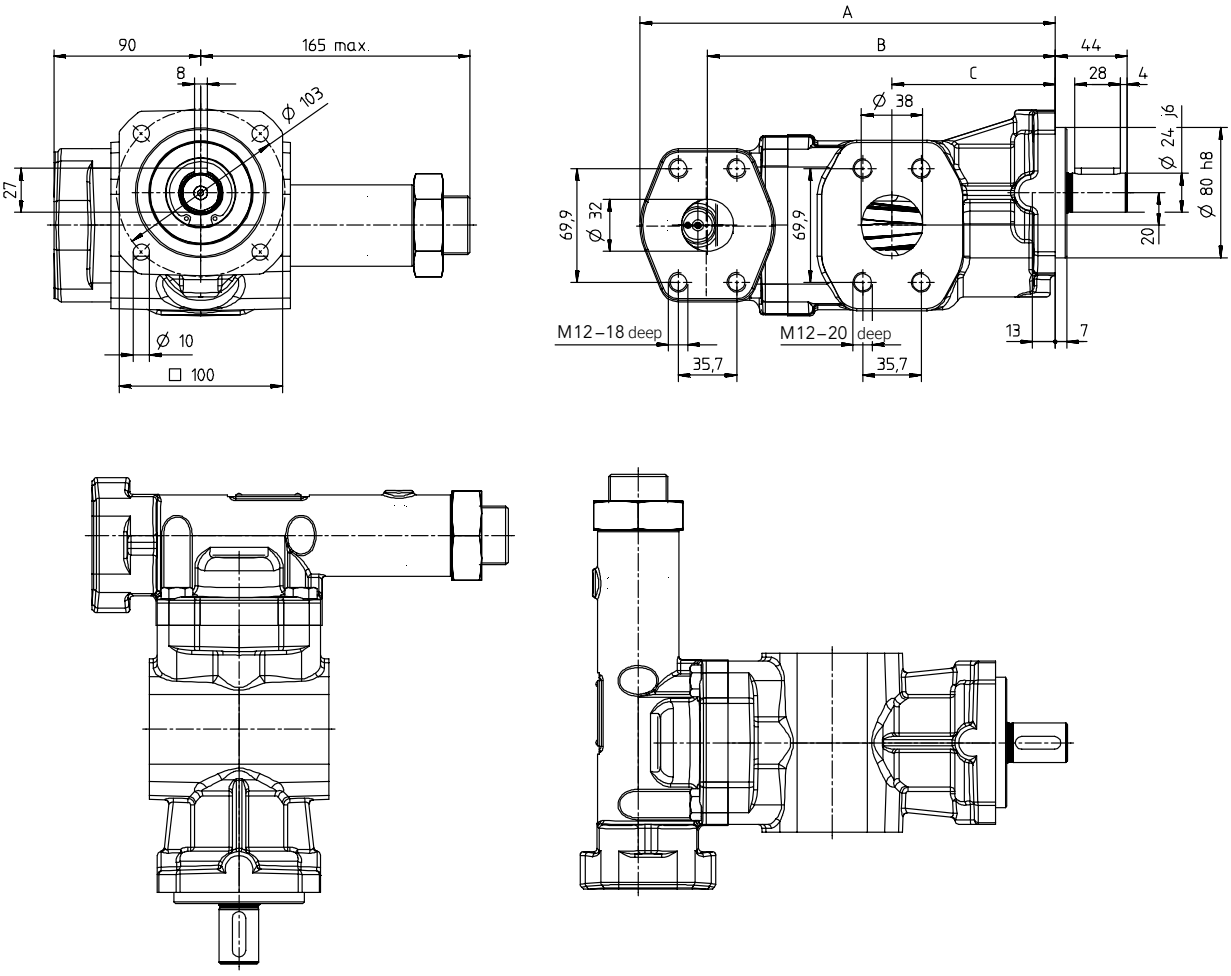

Nominal size	A	B	C	Weight
32 … 50	220	184	84	9.5
63 / 80	255	213	100	11.2

Dimensions in mm / Weights in kg

Dimensions and weights

KF 730 … 1500

Version with housing cover

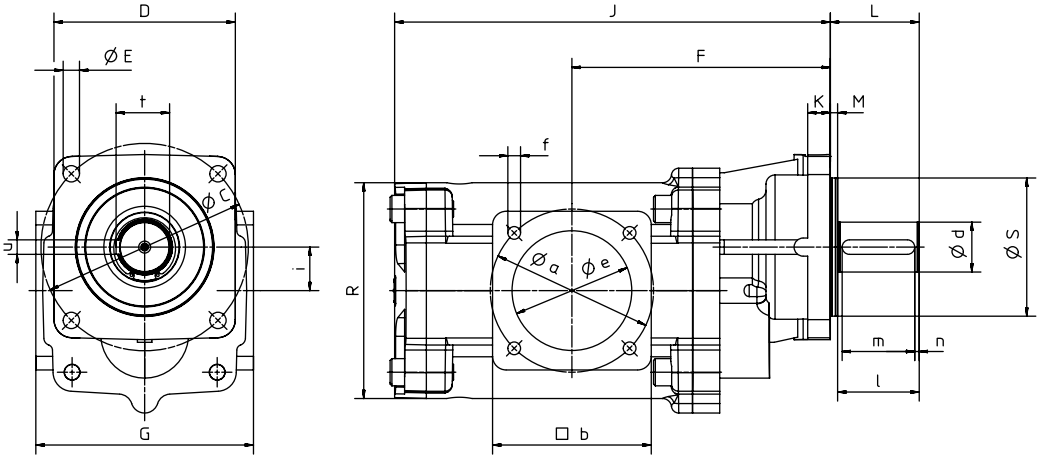

Version with pressure relief valve (type code ID: B)

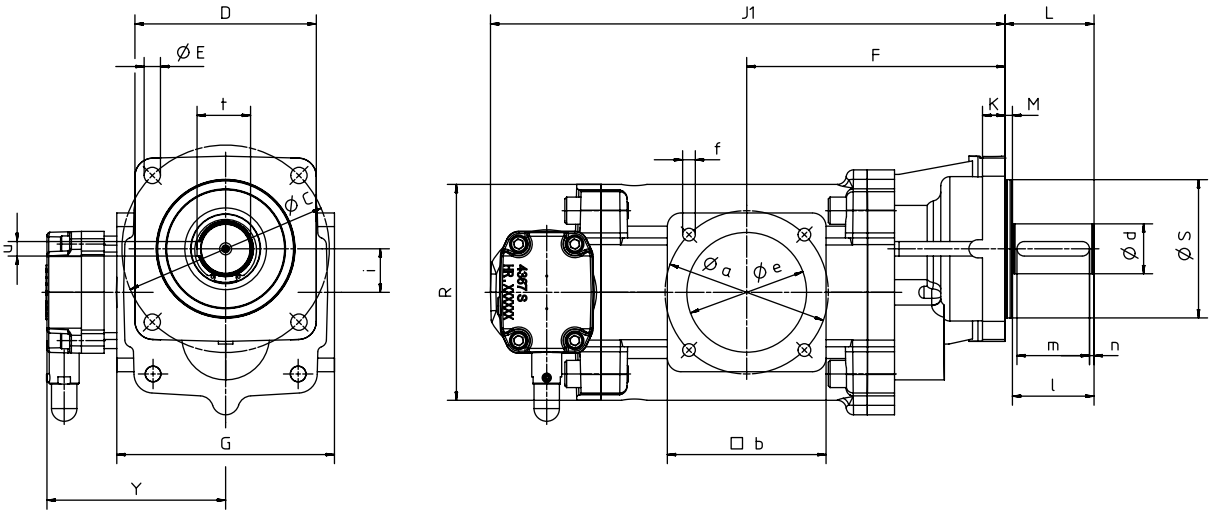

Nominal size	DN	Suction and pressure connection				Housing														Shaft end						Weight	
		a	b	e	f	C	D	E	F	G	J	J_1	K	L	M	R	S_{h8}	i	Y	d_{j6}	l	m	n	t	u	without valve	with valve
730	132	180	175	132	M16 - 30 deep	228.7	200	18	285	240	415	502	25	98	8	238	152.4	48	197	55	90	80	5	59	16	90	99.5
1000	132	180	175	132	M16 - 30 deep	228.7	200	18	285	240	481	568	25	98	8	238	152.4	48	197	55	90	80	5	59	16	102	111.5
1250	160	210	205	160	M16 - 30 deep	228.7	200	18	330	270	559	646	25	98	8	238	152.4	48	197	55	90	80	5	59	16	124	133.5
1500	160	210	205	160	M16 - 30 deep	228.7	200	18	330	270	559	646	25	98	8	238	152.4	48	197	55	90	80	5	59	16	125	134.5

Dimensions in mm / Weights in kg

Dimensions and weights

KF 1800 … 3150

Version with housing cover

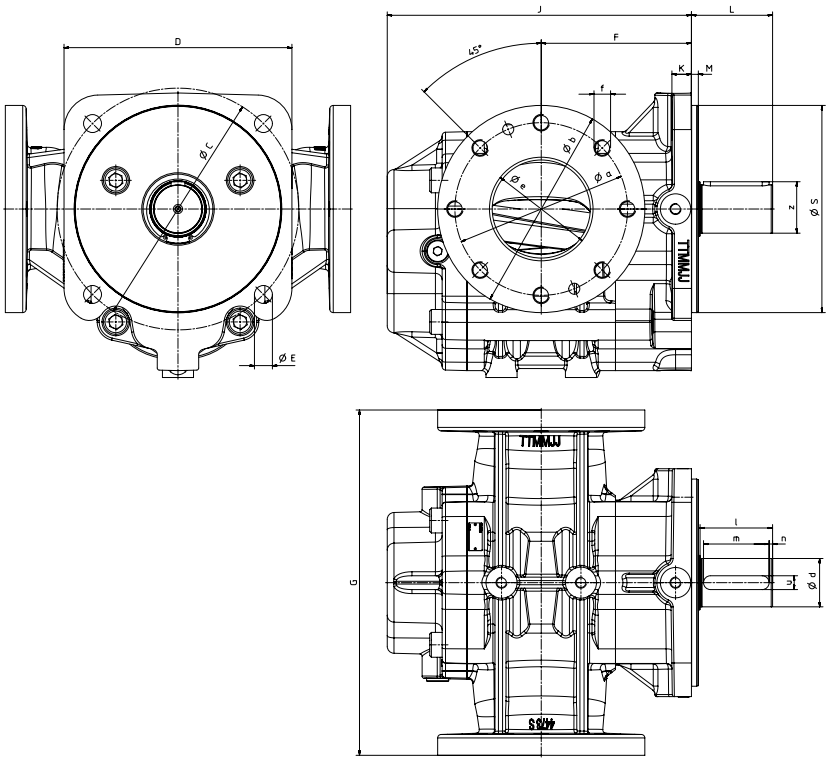

Version with pressure relief valve (type code ID: B)

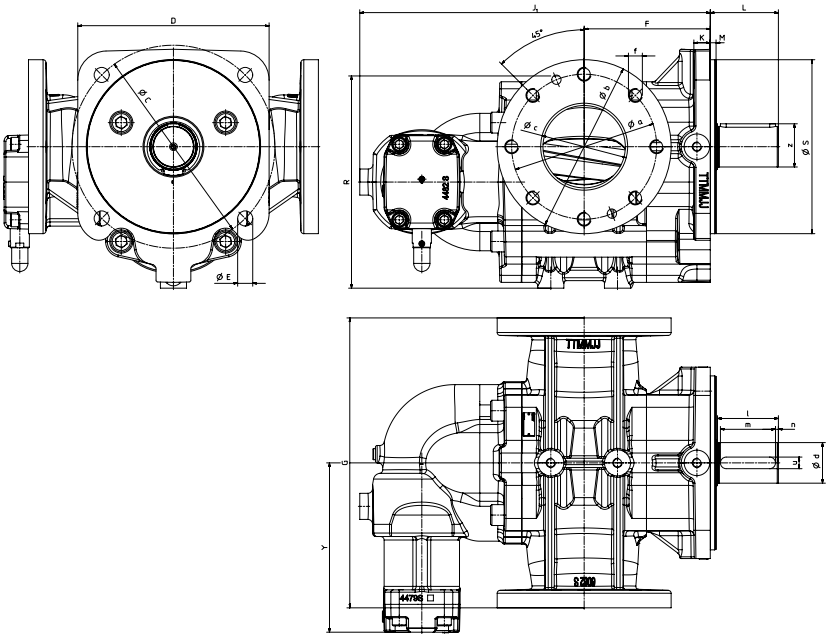

Nominal size	DN	Suction and pressure connection				Housing													Shaft end						Weight	
		a	b	e	f	C	D	E	F	G	J	J_1	K	L	M	R	S_{h7}	Y	d_{h11}	l	m	n	z	u	without valve	with valve
1800	150	250	300	150	M24	350	330	26	217.5	500	440.5	604.5	28.3	117.5	10	366	300	292	70	105	95	5	74.5	20	211	239
2000	150	250	300	150	M24	350	330	26	230.0	500	465.5	629.5	28.3	117.5	10	366	300	292	70	105	95	5	74.5	20	219	248
2500	200	310	360	200	M24	350	330	26	257.5	500	520.5	684.5	28.3	117.5	10	366	300	292	70	105	95	5	74.5	20	243	271
3150	200	310	360	200	M24	350	330	26	295.0	500	595.5	759.5	28.3	117.5	10	366	300	292	70	105	95	5	74.5	20	263	290

Dimensions in mm / Weights in kg

Dimensions and weights

KF / KF-F 2.5 … 630 – Motor-pump unit, SAE, IM B35

Version with housing cover / SAE

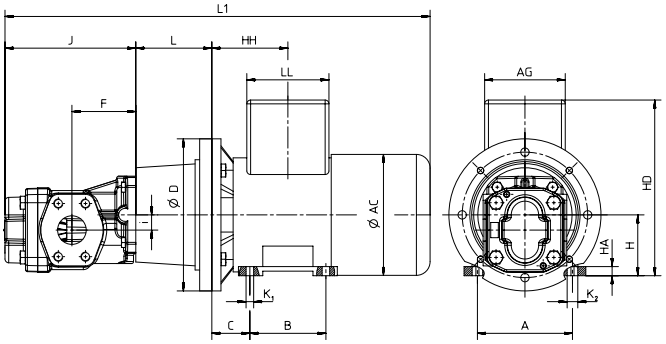

Version with pressure relief valve / SAE

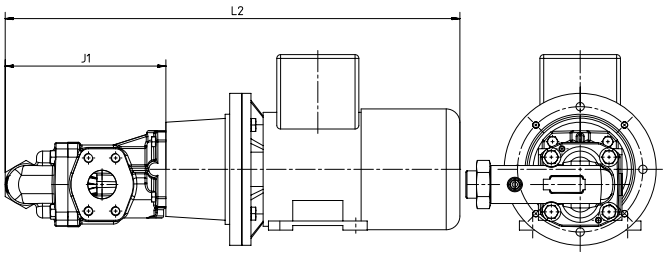

IEC motor size	2.5 … 12	16 … 25	2.5 … 12	16 … 25	2.5 … 25													
	L1*		L2*		L	D	A	B	C	H	HD*	K_1	K_2	AC*	HA*	LL*	HH*	AG*
71	408.0	430.0	440.0	462.0	80	160	112	90	45	71	201	7	10	147	9	108	90.0	101
80	499.0	521.0	531.0	553.0	100	200	125	100	50	80	231	10	14	159	12	108	100.0	106
90 S	505.0	527.0	537.0	559.0	100	200	140	100	56	90	251	10	14	179	13	115	106.0	109
90 L	545.0	567.0	577.0	599.0	100	200	140	125	56	90	251	10	14	179	13	115	118.5	109
100	650.5	672.5	682.5	704.5	120	250	160	140	63	100	293	12	16	199	16	134	133.0	163
112	640.0	662.0	672.0	694.0	120	250	190	140	70	112	308	12	16	222	15	140	140.0	163

	32 … 50	63 … 80	32 … 50	63 … 80	32 … 80													
80	563.0	598.0	602.5	637.5	100	200	125	100	50	80	231	10	14	159	12	108	100.0	106
90 S	579.0	614.0	618.5	653.5	110	200	140	100	56	90	251	10	14	179	13	115	106.0	109
90 L	619.0	654.0	658.5	693.5	110	200	140	125	56	90	251	10	14	179	13	115	118.5	109
100	718.5	753.5	758.0	793.0	124	250	160	140	63	100	293	12	16	199	16	134	133.0	163
112	708.0	743.0	747.5	782.5	124	250	190	140	70	112	308	12	16	222	15	140	140.0	163
132 S	752.5	787.5	792.0	827.0	144	300	216	140	89	132	350	12	16	271	20	140	159.0	163
132 M	752.5	787.5	792.0	827.0	144	300	216	178	89	132	350	12	16	271	20	140	178.0	163
160 M	916.0	951.0	955.5	990.5	188	350	254	210	108	160	437	15	19	329	22	198	213.0	190
160 L	938.0	973.0	977.5	1012.5	188	350	254	254	108	160	437	15	19	329	22	198	235.0	190

	100/112	125/150	180/200	100/112	125/150	180/200	100 … 200													
100	778.0	802.5	819.0	820.0	839.5	856.0	135	250	160	140	63	100	293	12	16	199	16	134	133.0	163
112	767.5	792.0	808.5	809.5	829.0	845.5	135	250	190	140	70	112	308	12	16	222	15	140	140.0	163
132 S	825.0	849.5	866.0	867.0	886.5	903.0	168	300	216	140	89	132	350	12	16	271	20	140	159.0	163
132 M	825.0	849.5	866.0	867.0	886.5	903.0	168	300	216	178	89	132	350	12	16	271	20	140	178.0	163
160 M	964.5	989.0	1005.5	1006.5	1026.0	1042.5	188	350	254	210	108	160	437	15	19	329	22	198	213.0	190
160 L	986.5	1011.0	1027.5	1028.5	1048.0	1064.5	188	350	254	254	108	160	437	15	19	329	22	198	235.0	190
180 M	1025.5	1050.0	1066.5	1067.5	1087.0	1103.5	204	350	279	241	121	180	477	15	19	360	28	198	241.5	190
180 L	1060.5	1085.0	1101.5	1102.5	1122.0	1138.5	204	350	279	279	121	180	477	15	19	360	28	198	261.0	210

	250/315	400/500	630	250/315	400/500	630	250 … 630													
132 S	943.5	1005.5	1049.5	996.5	1058.5	1102.5	196	300	216	140	89	132	350	12	16	271	20	140	159.0	163
132 M	943.5	1005.5	1049.5	996.5	1058.5	1102.5	196	300	216	178	89	132	350	12	16	271	20	140	178.0	163
160 M	1095.0	1157.0	1201.0	1148.0	1210.0	1254.0	228	350	254	210	108	160	437	15	19	329	22	198	213.0	190
160 L	1117.0	1179.0	1223.0	1170.0	1232.0	1276.0	228	350	254	254	108	160	437	15	19	329	22	198	235.0	190
180 M	1140.0	1202.0	1246.0	1193.0	1255.0	1299.0	228	350	279	241	121	180	477	15	19	360	28	198	241.5	190
180 L	1175.0	1237.0	1281.0	1228.0	1290.0	1334.0	228	350	279	279	121	180	477	15	19	360	28	198	261.0	210
200 L	1275.0	1337.0	1381.0	1328.0	1390.0	1434.0	228	400	318	305	133	200	521	19	25	402	30	228	285.0	266
225 S	1319.0	1381.0	1425.0	1372.0	1434.0	1478.0	262	450	356	286	149	225	609	19	25	465	34	261	283.0	292
225 M	1361.0	1423.0	1467.0	1414.0	1476.0	1520.0	262	450	356	311	149	225	609	19	25	465	34	261	295.0	292
250 M	1416.0	1478.0	1522.0	1469.0	1531.0	1575.0	265	550	406	349	168	250	660	24	30	506	43	261	342.0	319

Pump dimensions

Nominal size	F	J	J1	i
2.5 … 12	54.0	108.0	140.0	14.2
16 … 25	63.0	130.0	162.0	14.2
32 … 50	84.0	172.0	211.5	20.0
63 / 80	100.0	207.0	246.5	20.0
100 / 112	102.0	220.5	262.5	23.7
125 / 150	120.0	245.0	282.0	23.7
180 / 200	130.0	261.5	298.5	23.7
250 / 315	155.0	311.0	364.0	35.5
400 / 500	200.0	373.0	426.0	35.5
630	200.0	417.0	470.0	35.5

Notes

* Dimensions dependent on motor manufacturer.
- Pumps of nominal sizes 2.5 … 25 are also available with pipe thread connection.
- Motors that can be combined with KF pumps: air motors, geared motors, hydraulic motors (for details, see data sheet KM), IEC electric motors in all common efficiency classes (up to IE4), motors in Atex/IECEx design, motors with marine approval, NEMA motors
- The motor dimensions refer to DIN 42673/677.
- All listed nominal pump sizes and motor sizes can be combined with each other.

Dimensions in mm / Weights in kg

Dimensions and weights

KF / KF-F 2.5 … 630 – Motor-pump unit, SAE, foot flange L, IM B5

Version with housing cover / SAE
Foot flange L (light version)

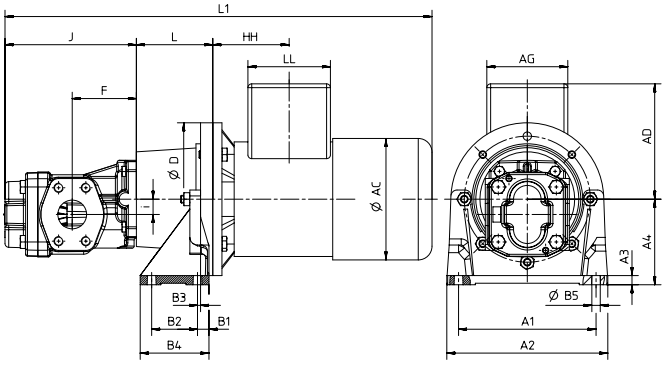

Version with pressure relief valve / SAE
Foot flange L (light version)

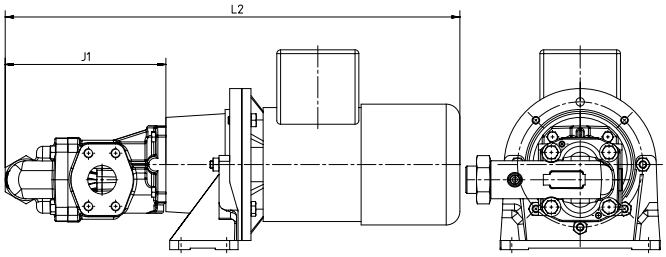

IEC motor size	2.5 … 12	16 … 25	2.5 … 12	16 … 25	2.5 … 25														
	L1*		L2*		L	D	A1	A2	A3	A4	B1	B2	B3	B4	B5	AD*	HH*	LL*	AG*	AC*
71	408.0	430.0	440.0	462.0	80	160	140	160	10	100	15	50	7	80	9	130	90.0	108	101	147
80	499.0	521.0	531.0	553.0	100	200	180	210	12	112	15	60	4	90	11	151	100.0	108	106	159
90 S	505.0	527.0	537.0	559.0	100	200	180	210	12	112	15	60	4	90	11	161	106.0	115	109	179
90 L	545.0	567.0	577.0	599.0	100	200	180	210	12	112	15	60	4	90	11	161	118.5	115	109	179
100	650.5	672.5	682.5	704.5	120	250	220	250	15	132	21	60	-	97	13	193	133.0	134	163	199
112	640.0	662.0	672.0	694.0	120	250	220	250	15	132	21	60	-	97	13	196	140.0	140	163	222

	32 … 50	63 … 80	32 … 50	63 … 80	32 … 80														
80	563.0	598.0	602.5	637.5	100	200	180	210	12	112	15	60	4	90	11	151	100.0	108	106	159
90 S	579.0	614.0	618.5	653.5	110	200	180	210	12	112	15	60	4	90	11	161	106.0	115	109	179
90 L	619.0	654.0	658.5	693.5	110	200	180	210	12	112	15	60	4	90	11	161	118.5	115	109	179
100	718.5	753.5	758.0	793.0	124	250	220	250	15	132	21	60	-	97	13	193	133.0	134	163	199
112	708.0	743.0	747.5	782.5	124	250	220	250	15	132	21	60	-	97	13	196	140.0	140	163	222
132 S	752.5	787.5	792.0	827.0	144	300	260	290	18	160	20	80	-	116	13	218	159.0	140	163	271
132 M	752.5	787.5	792.0	827.0	144	300	260	290	18	160	20	80	-	116	13	218	178.0	140	163	271
160 M	916.0	951.0	955.5	990.5	188	350	300	340	22	180	20	110	-	150	16	277	213.0	198	190	329
160 L	938.0	973.0	977.5	1012.5	188	350	300	340	22	180	20	110	-	150	16	277	235.0	198	190	329

	100/112	125/150	180/200	100/112	125/150	180/200	100 … 200															
100	778.0	802.5	819.0	820.0	839.5	856.0	135	250	220	250	15	132	21	60	-	97	13	193	133.0	134	163	199
112	767.5	792.0	808.5	809.5	829.0	845.5	135	250	220	250	15	132	21	60	-	97	13	196	140.0	140	163	222
132 S	825.0	849.5	866.0	867.0	886.5	903.0	168	300	260	290	18	160	20	80	-	116	13	218	159.0	140	163	271
132 M	825.0	849.5	866.0	867.0	886.5	903.0	168	300	260	290	18	160	20	80	-	116	13	218	178.0	140	163	271
160 M	964.5	989.0	1005.5	1006.5	1026.0	1042.5	188	350	300	340	22	180	20	110	-	150	16	277	213.0	198	190	329
160 L	986.5	1011.0	1027.5	1028.5	1048.0	1064.5	188	350	300	340	22	180	20	110	-	150	16	277	235.0	198	190	329
180 M	1025.5	1050.0	1066.5	1067.5	1087.0	1103.5	204	350	300	340	22	180	20	110	-	150	16	297	241.5	198	190	360
180 L	1060.5	1085.0	1101.5	1102.5	1122.0	1138.5	204	350	300	340	22	180	20	110	-	150	16	297	261.0	198	210	360

	250/315	400/500	630	250/315	400/500	630	250 … 630																
	L1*			L2*			L	D	A1	A2	A3	A4	B1	B2	B3	B4	B5	B6	AD*	HH*	LL*	AG*	AC*
132 S	943.5	1005.5	1049.5	996.5	1058.5	1102.5	196	300	265	300	19	185	75	225	92	270	14	10	218	159	140	163	271
132 M	943.5	1005.5	1049.5	996.5	1058.5	1102.5	196	300	265	300	19	185	75	225	92	270	14	10	218	178	140	163	271
160 M	1095.0	1157.0	1201.0	1148.0	1210.0	1254.0	228	350	300	350	18	235	90	265	110	305	18	12	277	213	198	190	329

Pump dimensions

Nominal size	F	J	J1	i
2.5 … 12	54.0	108.0	140.0	14.2
16 … 25	63.0	130.0	162.0	14.2
32 … 50	84.0	172.0	211.5	20.0
63 / 80	100.0	207.0	246.5	20.0
100 / 112	102.0	220.5	262.5	23.7
125 / 150	120.0	245.0	282.0	23.7
180 / 200	130.0	261.5	298.5	23.7
250 / 315	155.0	311.0	364.0	35.5
400 / 500	200.0	373.0	426.0	35.5
630	200.0	417.0	470.0	35.5

Notes

* Dimensions dependent on motor manufacturer.
- Pumps of nominal sizes 2.5 … 25 are also available with pipe thread connection.
- Motors that can be combined with KF pumps: air motors, geared motors, hydraulic motors (for details, see data sheet KM), IEC electric motors in all common efficiency classes (up to IE4), motors in Atex/IECEx design, motors with marine approval, NEMA motors
- The motor dimensions refer to DIN 42673/677.
- All listed nominal pump sizes and motor sizes can be combined with each other.

Dimensions in mm / Weights in kg

Dimensions and weights

KF / KF-F 250 … 630 – Motor-pump unit, SAE, foot flange S, IM B5

Version with housing cover
Foot flange S (heavy version)

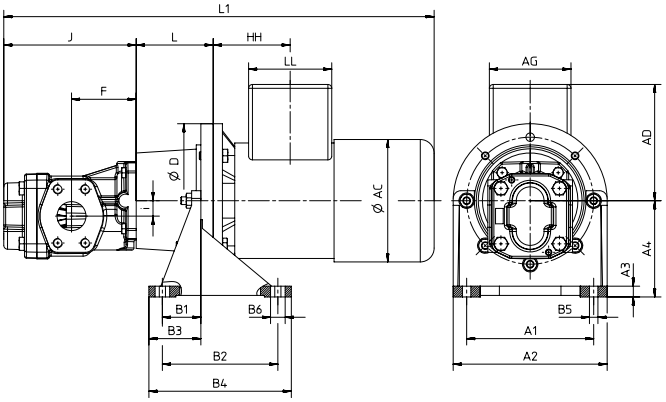

Version with pressure relief valve
Foot flange S (heavy version)

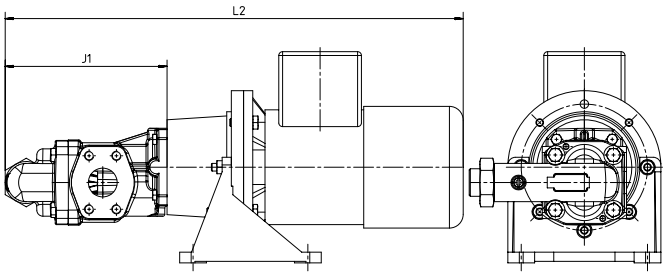

IEC motor size	250/315	400/500	630	250/315	400/500	630	250 … 630																
	L1*			L2*			L	D	A1	A2	A3	A4	B1	B2	B3	B4	B5	B6	AD*	HH*	LL*	AG*	AC*
160 L	1117	1179	1223	1170	1232	1276	228	350	300	350	18	235	90	265	110	305	18	12	277	235.0	198	190	329
180 M	1140	1202	1246	1193	1255	1299	228	350	300	350	18	235	90	265	110	305	18	12	297	241.5	198	190	360
180 L	1175	1237	1281	1228	1290	1334	228	350	300	350	18	235	90	265	110	305	18	12	297	261.0	198	210	360
200 L	1275	1337	1381	1328	1390	1434	228	400	350	400	20	260	100	300	125	350	18	12	321	285.0	228	266	402
225 S	1319	1381	1425	1372	1434	1478	262	450	400	450	20	295	110	335	138	385	18	12	384	283.0	261	292	465
225 M	1361	1423	1467	1414	1476	1520	262	450	400	450	20	295	110	335	138	385	18	12	384	295.0	261	292	465
250 M	1416	1478	1522	1469	1531	1575	265	550	500	550	25	350	140	415	165	465	18	12	410	342.0	261	319	506

Pump dimensions

Nominal size	F	J	J1	i
250 / 315	155.0	311.0	364.0	35.5
400 / 500	200.0	373.0	426.0	35.5
630	200.0	417.0	470.0	35.5

Notes

* Dimensions dependent on motor manufacturer.
- Motors that can be combined with KF pumps: air motors, geared motors, hydraulic motors (for details, see data sheet KM), IEC electric motors in all common efficiency classes (up to IE4), motors in Atex/IECEx design, motors with marine approval, NEMA motors
- The motor dimensions refer to DIN 42673/677.
- All listed nominal pump sizes and motor sizes can be combined with each other.

Dimensions in mm / Weights in kg

Dimensions and weights

KF 730 … 3150 – Motor-pump unit, SAE D-4-hole-flange

Version with housing cover

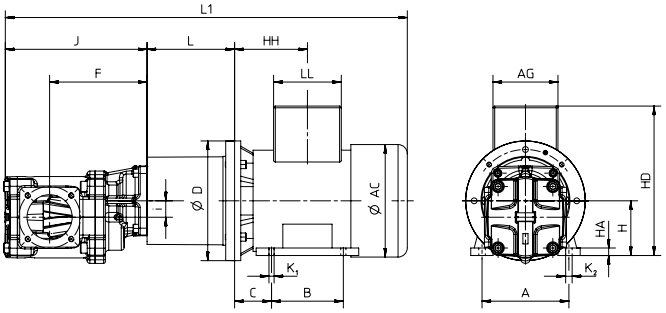

Version with pressure relief valve

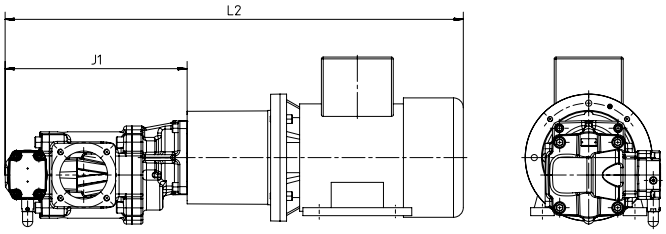

IEC motor size	730	1000	1250 1500	1800	2000	2500	3150	730	1000	1250 1500	1800	2000	2500	3150										
	L1*							L2*							L	D	A	AC*	B	H	HA	HD*	HH*	K_1	C
160 M	1166	1232	1310	-	-	-	-	1253	1319	1397	-	-	-	-	256	350	254	325	210	160	17	410	172.0	15	108
160 L	1211	1277	1355	-	-	-	-	1298	1364	1442	-	-	-	-	256	350	254	325	254	160	17	410	172.0	15	108
180 M	1248	1314	1392	-	-	-	-	1335	1401	1479	-	-	-	-	256	350	279	360	241	180	27	450	241.0	15	121
180 L	1286	1352	1430	-	-	-	-	1373	1439	1517	-	-	-	-	256	350	279	360	279	180	27	450	261.0	15	121
200 M/L	1301	1367	1445	-	-	-	-	1388	1454	1532	-	-	-	-	228	400	318	399	305	200	25	500	285.0	19	133
225 S	1351	1417	1495	-	-	-	-	1438	1504	1582	-	-	-	-	262	450	356	465	286	225	28	560	283.0	19	149
225 M	1376	1442	1520	-	-	-	-	1463	1529	1607	-	-	-	-	262	450	356	465	311	225	28	560	295.0	19	149
250 M	1458	1524	1602	1534	1559	1614	1689	1545	1611	1689	1698	1723	1778	1853	265	550	406	506	349	250	30	616	342.0	24	168
280 S	1534	1600	1678	1600	1625	1680	1755	1621	1687	1765	1764	1789	1844	1919	275	550	457	559	368	280	34	673	374.0	24	190
280 M	1585	1651	1729	1651	1676	1731	1806	1672	1738	1816	1815	1840	1895	1970	275	550	457	559	419	280	34	690	399.5	24	190
315 S	1940	2006	2084	1966	1991	2046	2121	2027	2093	2171	2130	2155	2210	2285	310	660	508	682	508	315	45	825	345.0	28	216
315 M/L	1790	1856	1934	1816	1841	1896	1971	1877	1943	2021	1980	2005	2060	2135	310	660	508	682	406	315	45	825	345.0	28	216

Pump dimensions

Nominal size	F	J	J1	i
730	285.0	415.0	502.0	48.0
1000	285.0	481.0	568.0	
1250	330.0	559.0	646.0	
1500	330.0	559.0	646.0	
1800	217.5	440.5	604.5	
2000	230.0	465.5	629.5	
2500	257.5	520.5	684.5	
3150	295.0	595.5	759.5	

Notes

* Dimensions dependent on motor manufacturer.

- Motors that can be combined with KF pumps: air motors, geared motors, hydraulic motors (for details, see data sheet KM), IEC electric motors in all common efficiency classes (up to IE4), motors in Atex/IECEx design, motors with marine approval, NEMA motors
- The motor dimensions refer to DIN 42673/677.
- All listed nominal pump sizes and motor sizes can be combined with each other.

Weights

Size	Total weight (pump, motor, bellhousing and coupling)			
	730	1000	1250	1500
160 M	260.8	272.8	294.8	295.8
160 L	266.4	278.4	300.4	301.4
180 M	286.9	298.9	320.9	321.9
180 L	311.5	323.5	345.5	346.5
200 M	385.9	397.9	419.9	420.9
200 L	415.4	427.4	449.4	450.4
225 S	460.3	472.3	494.3	495.3
225 M	517.4	529.4	551.4	552.4
250 M	613.5	625.5	647.5	648.5
280 S	809.0	821.0	843.0	844.0
280 M	865.0	877.0	899.0	900.0
315 S	1212.7	1224.7	1246.7	1247.7
315 M	-	1359.1	1381.1	1382.1
315 L	-	1448.7	1470.7	1471.7

Dimensions in mm / Weights in kg

Technical data

Standard motors for KF 2.5 … 3150 / KF-F 2.5 … 630

	IEC motor size	Performance at 400 V / 50 Hz in kW			Foot flange
		Motor 4-pole	Motor 6-pole	Motor 8-pole	
KF / KF-F 2.5 … 630	**71 M**	0.25	0.18	0.09	PTFL 160
	71 M	0.37	0.25	0.12	PTFL 160
	80 M	0.55	0.37	0.18	PTFL 200
	80 M	0.75	0.55	0.25	PTFL 200
	90 S	1.10	0.75	0.37	PTFL 200
	90 L	1.50	1.10	0.55	PTFL 200
	100 L	2.20	-	0.75	PTFL 250
	100 L	3.00	1.50	1.10	PTFL 250
	112 M	4.00	2.20	1.50	PTFL 250
	132 S	5.50	3.00	2.20	PTFL 300
	132 M	7.50	4.00	3.00	PTFL 300
	132 M	-	5.50	-	PTFL 300
KF 730 … 3150	**160 M**	11.00	7.50	4.00	PTFL 350
	160 L	15.00	11.00	5.50	PTFS 350
	180 M	18.50	-	-	PTFS 350
	180 L	22.00	15.00	11.00	PTFS 350
	200 L	30.00	18.50	-	PTFS 400
	200 L	-	22.00	15.00	PTFS 400
	225 S	37.00	-	18.50	PTFS 450
	225 M	45.00	30.00	22.00	PTFS 450
	250 M	55.00	37.00	30.00	PTFS 550
	280 S	75.00	45.00	-	On request
	280 M	90.00	55.00	-	
	315 S	110.00	75.00	-	
	315 M	132.00	90.00	-	
	315 L	160.00	110.00	-	

Technical data

KF / KF-F 2.5 … 630 with magnetic coupling

Pump	IEC motor size	Performance in kW at				Coupling size
		750 1/min	1000 1/min	1500 1/min	3000 1/min	
2.5 … 25	**63**	-	-	0.12 / 0.18	0.25	MSA 46
	71	0.12	0.18	0.25	0.37 / 0.55	
	71	-	0.25	0.37	-	MSA 60
	80	0.18 / 0.25	0.37	0.55	0.75 / 1.10	
	80	-	0.55	0.75	-	MSB 60
	90	0.37 / 0.55	0.75	1.10	1.50 / 2.20	
	90	-	1.10	1.50	-	MSB 75
	100	0.75 / 1.10	1.50	2.20	3.00	
	112	-	-	-	4.00	
	100	-	-	3.00	-	MSC 75
	112	1.50	2.20	4.00	-	
	132	2.20	3.00	-	5.50 / 7.50	
32 … 112	**80**	-	0.55	0.75	-	MSB 60
	90	0.37 / 0.55	0.75	1.10	1.50 / 2.20	
	90	-	1.10	1.50	-	MSB 75
	100	0.75 / 1.10	1.50	2.20	3.00	
	112	-	-	-	4.00	
	100	-	-	3.00	-	MSC 75
	112	1.50	2.20	4.00	-	
	132	2.20	3.00	-	5.50 / 7.50	
	132	3.00	4.00	5.50	-	MSB 110
	160	-	-	-	11.00	
	132	-	5.50	7.50	-	MSC 110
	160	4.00 / 5.50	7.50	11.00	15.00 / 18.50	
100 … 200	**100**	-	-	3.00	-	MSC 75
	112	1.50	2.20	4.00	-	
	132	2.20	3.00	-	5.50 / 7.50	
	132	3.00	4.00	5.50	-	MSB 110
	160	-	-	-	11.00	
	132	-	5.50	7.50	-	MSC 110
	160	4.00 / 5.50	7.50	11.00	15.00 / 18.50	
	180	-	-	-	22.00	
	160	7.50	11.0	15.00	-	MSC 135
	180	-	-	18.50	-	
	200	-	-	-	30.00 / 37.00	
	180	11.0	15.00	22.00	-	MSD 135
	225	-	-	-	45.00	
	200	15.00	18.50 / 22.00	30.00	-	MSD 165
250 … 315	**132**	3.00	4.00	5.50	-	SB 110
	160	-	-	-	11.00	
	132	-	5.50	7.50	-	SC 110
	160	4.00 / 5.50	7.50	11.00	15.00 / 18.50	
	180	-	-	-	22.00	
	160	7.50	-	15.00	-	SC 135
	180	-	-	18.50	-	
	200	-	-	-	30.00 / 37.00	
	180	11.00	15.00	22.00	-	SD 135
	225	-	-	-	45.00	
	200	15.00	18.50 / 22.00	30.00	-	SD 165
	225	18.50 / 22.00	30.00	37.00 / 45.00	-	SE 165
400 … 630	**160**	4.00 / 5.50	5.50	11.00	15.00 / 18.50	SC 110
	180	-	-	-	22.00	
	180	-	-	18.50	-	SC 135
	200	-	-	-	30.00 / 37.00	
	180	11.00	15.00	22.00	-	SD 135
	225	-	-	-	45.00	
	200	15.00	18.50 / 22.00	30.00	-	SD 165
	225	18.50 / 22.00	30.00	37.00 / 45.00	-	SE 165

The values given in the table refer to a maximum media temperature of 80 °C and can pressures of up to 25 bar.
For media temperatures > 80 °C and/or can pressures > 25 bar, stronger magnetic couplings may need to be selected.
The following information must be available for the design of a magnetic coupling:

- Pump size
- Pump pressure (pressure and suction side)
- Operating and start-up viscosity
- Exact media designation - required static seals (if possible) - any important media properties
- Power of the drive motor
- Speed or speed range
- Switch-on type – direct or with frequency converter
- Media and ambient temperature

Technical data – accessories

Bellhousing

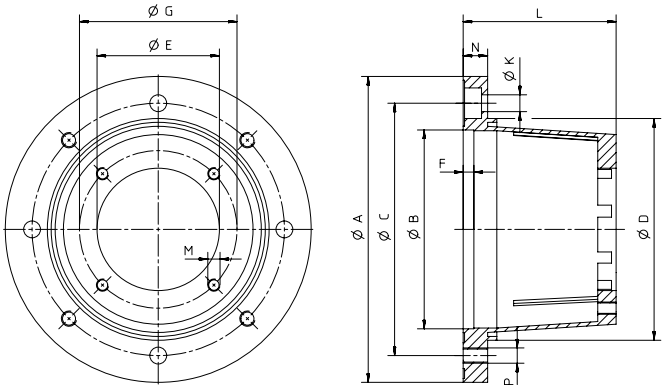

Type key

PT	160	A	063	80
Short description bellhousing	Outer Ø on motor side	Design A = rigid	Centring Ø on pump side	Total length bellhousing

Pump	IEC motor size	A	B	C	D	E	F	G	K	L	M	N	P	Bellhousing
2.5 … 25	**71 M**	160	110	130	110	63.0	7	85.0	9	80	M8	13	M8	PT 160-A-063-80
	80 M	200	130	165	145	63.0	7	85.0	11	100	M8	16	M10	PT 200-A-063-100
	90 S/L	200	130	165	145	63.0	7	85.0	11	100	M8	16	M10	PT 200-A-063-100
	100 L / 112 M	250	180	215	190	63.0	7	85.0	14	120	M8	19	M12	PT 250-A-063-120
	132 S/M	300	230	265	234	63.0	7	85.0	14	144	M8	20	M12	PT 300-A-063-144
32 … 80	**80 M**	200	130	165	145	80.0	7	103.0	11	100	M8	16	M10	PT 200-A-080-100
	90 S/L	200	130	165	145	80.0	7	103.0	11	110	M8	16	M10	PT 200-A-080-110
	100 L /112 M	250	180	215	190	80.0	7	103.0	14	124	M8	18	M12	PT 250-A-080-124
	132 S/M	300	230	265	234	80.0	7	103.0	14	144	M8	20	M12	PT 300-A-080-144
	160 M/L	350	250	300	260	80.0	7	103.0	18	188	M8	26	M16	PT 350-A-080-188
100 … 200	**100 L /112 M**	250	180	215	190	110.0	7	145.0	14	135	M12	18	M12	PT 250-A-110-135
	132 S/M	300	230	265	234	110.0	7	145.0	14	168	M12	20	M12	PT 300-A-110-168
	160 M/L	350	250	300	260	110.0	7	145.0	18	188	M12	26	M16	PT 350-A-110-188
	180 M/L	350	250	300	260	110.0	7	145.0	18	204	M12	26	M16	PT 350-A-110-204
250 … 630	**132 S/M**	300	230	265	234	160.0	7	200.0	14	196	M16	20	M12	PT 300-A-160-196
	160 M/L	350	250	300	260	160.0	7	200.0	18	228	M16	26	M16	PT 350-A-160-228
	180 M/L	350	250	300	260	160.0	7	200.0	18	228	M16	26	M16	PT 350-A-160-228
	200 M/L	400	300	350	300	160.0	7	200.0	18	228	M16	26	M16	PT 400-A-160-228
	225 S/M	450	350	400	350	160.0	7	200.0	18	262	M16	26	M16	PT 450-A-160-262
	250 M	550	450	500	450	160.0	6	200.0	18	265	M16	26	M16	PT 550-A-160-265
730 … 1500	**160 M/L**	350	250	300	260	152.4	7	228.6	18	256	M 16	26	M16	PT 350-A-152.4-256
	180 M/L	350	250	300	260	152.4	7	228.6	18	256	M 16	26	M16	PT 350-A-152.4-256
	200 M/L	400	300	350	300	152.4	7	228.6	18	228	M 16	26	M16	PT 400-A-152.4-228
	225 S/M	450	400	450	350	152.4	7	228.6	18	262	M 16	26	M16	PT 450-A-152.4-262
	250 M	550	450	500	450	152.4	7	228.6	18	265	M 16	26	M16	PT 550-A-152.4-265
	280 S/M	550	450	500	450	152.4	6	228.6	18	275	M 16	26	M16	PT 550-A-152.4-275
	315 S/M/L	660	550	600	550	152.4	8	228.6	22	310	M 16	32	M20	PT 660-A-152.4-310
1800 … 3150	On request													

Dimensions in mm

Technical data – accessories

Couplings

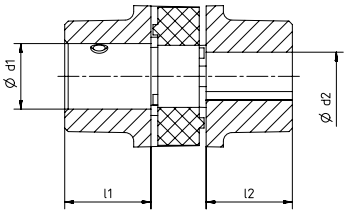

Type key

R	A	19	Z	25	10	Z	25	10
Short description manufacturer	Material A = Aluminium G = Cast iron	Coupling size	Hub bore cylindrical pump side	Hub length pump side	Bore Ø pump side	Hub bore cylindrical motor side	Hub length motor side	Bore Ø motor side

Pump	IEC motor size	l1	d1	l2	d2	Coupling
2.5 … 25	**71 M**	25	14	25	14	RA 19-Z25/14-Z25/14
	80 M	25	14	25	19	RA 19-Z25/14-Z25/19
	90 S/L	25	14	25	24	RA 19-Z25/14-Z25/24
	100 L / 112 M	30	14	30	28	RA 24-Z30/14-Z30/28
	132 S/M	35	14	35	38	RA 28-Z35/14-Z35/38
32 … 80	**80 M**	25	24	25	19	RA 19-Z25/24-Z25/19
	90 S/L	30	24	30	24	RA 24-Z30/24-Z30/24
	100 L /112 M	30	24	30	28	RA 24-Z30/24-Z30/28
	132 S/M	35	24	35	38	RA 28-Z35/24-Z35/38
	160 M/L	45	24	45	42	RA 38-Z45/24-Z45/42
100 … 200	**100 L /112 M**	30	28	30	28	RA 24-Z30/28-Z30/28
	132 S/M	35	28	35	38	RA 28-Z35/28-Z35/38
	160 M/L	45	28	45	42	RA 38-Z45/28-Z45/42
	180 M/L	50	28	50	48	RA 42-Z50/28-Z50/48
250 … 630	**132 S/M**	35	38	35	38	RA 28-Z35/38-Z35/38
	160 M/L	45	38	45	42	RA 38-Z45/38-Z45/42
	180 M/L	50	38	50	48	RA 42-Z50/38-Z50/48
	200 M/L	50	38	50	55	RA 42-Z50/38-Z50/55
	225 S/M	56	38	56	60	RA 48-Z56/38-Z56/60
	250 M	65	38	65	65	RG 55-Z65/38-Z65/65
730 … 1500	**160 M**	50	55	75	42	RG 42-Z50/55-Z75/42
	160 L	50	55	75	42	RG 42-Z50/55-Z75/42
	180 M	50	55	75	48	RG 42-Z50/55-Z75/48
	180 L	50	55	75	48	RG 42-Z50/55-Z75/48
	200 M	50	55	50	55	RG 42-Z50/55-Z50/55
	200 L	50	55	50	55	RG 42-Z50/55-Z50/55
	225 S	56	55	56	60	RG 48-Z56/55-Z56/60
	225 M	56	55	56	60	RG 48-Z56/55-Z56/60
	250 M	65	55	65	65	RG 55-Z65/55-Z65/65
	280 S	75	55	75	75	RG 65-Z75/55-Z75/75
	280 M	75	55	75	75	RG 65-Z75/55-Z75/75
	315 S	75	55	75	75	RG 65-Z75/55-Z75/75
	315 M	85	55	85	80	RG 75-Z85/55-Z85/80
	315 L	85	55	85	80	RG 75-Z85/55-Z85/80
1800 … 3150	On request					

Dimensions in mm

Technical data – accessories

SAE threaded flange for KF / KF-F 2.5 … 630

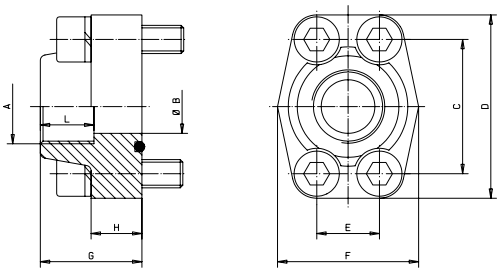

Nominal size	A	B_{max}	C	D*	E	F*	G	H*	L_{min}	Screws 10.9	O-ring**	Maximum pressure**	Weight
³/₄″	G¹/₂	13	47.63	65	22.23	50	36	18	14	M10x35	24.99 x 3.53	350	0.54
	G³/₄	19	47.63	65	22.23	50	36	18	16	M10x35	24.99 x 3.53	350	0.51
1″	G¹/₂	13	52.37	70	26.19	55	38	18	14	M10x35	32.92 x 3.53	315	0.64
	G³/₄	19	52.37	70	26.19	55	38	18	16	M10x35	32.92 x 3.53	315	0.61
	G1	25	52.37	70	26.19	55	38	18	18	M10x35	32.92 x 3.53	315	0.58
1¹/₄″	G³/₄	19	58.72	79	30.18	68	41	21	16	M10x40	37.69 x 3.53	250	0.92
	G1	25	58.72	79	30.18	68	42	25	18	M10x40	37.69 x 3.53	250	0.88
	G1¹/₄	32	58.72	79	30.18	68	41	21	20	M10x40	37.69 x 3.53	250	0.79
1¹/₂″	G1	25	69.85	93	35.71	78	45	25	18	M12x45	47.22 x 3.53	200	1.36
	G1¹/₄	32	69.85	93	35.71	78	45	27	20	M12x45	47.22 x 3.53	200	1.30
	G1¹/₂	38	69.85	93	35.71	78	45	25	22	M12x45	47.22 x 3.53	200	1.25
2″	G1	25	77.77	102	42.88	90	45	25	18	M12x45	56.74 x 3.53	200	1.64
	G1¹/₄	32	77.77	102	42.88	90	45	25	20	M12x45	56.74 x 3.53	200	1.60
	G1¹/₂	38	77.77	102	42.88	90	45	25	22	M12x45	56.74 x 3.53	200	1.45
	G2	51	77.77	102	42.88	90	45	25	26	M12x45	56.74 x 3.53	200	1.39
2¹/₂″	G2	51	88.90	114	50.80	105	50	25	26	M12x45	69.44 x 3.53	160	1.65
	G2¹/₂	63	88.90	114	50.80	105	50	25	30	M12x45	69.44 x 3.53	160	1.60
3″	G2¹/₂	63	106.38	134	61.93	124	50	27	30	M16x50	85.32 x 3.53	138	2.68
	G3	73	106.38	134	61.93	124	50	27	30	M16x50	85.32 x 3.53	138	2.58
3¹/₂″	G3	73	120.65	152	69.85	136	48	27	30	M16x50	98.02 x 3.53	35	2.93
	G3¹/₂	89	120.65	152	69.85	136	48	27	30	M16x50	98.02 x 3.53	35	2.83
4″	G3¹/₂	89	130.20	162	77.80	146	48	27	30	M16x50	110.72 x 3.53	35	3.42
	G4	99	130.20	162	77.80	146	48	27	30	M16x50	110.72 x 3.53	35	3.27

SAE weld-on flange for KF / KF-F 2.5 … 630

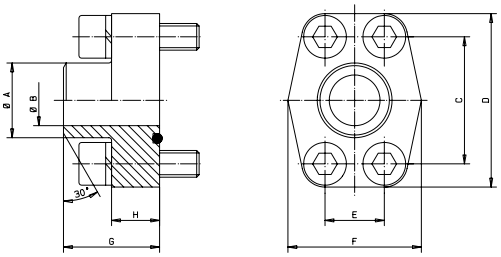

Nominal size	A	B_{max}	C	D*	E	F*	G	H*	Screws 10.9	O-ring**	Maximum pressure**	Weight
³/₄″	28.0	19	47.63	65	22.23	50	36	18	M10x35	24.99 x 3.53	350	0.51
1″	34.0	25	52.37	70	26.19	55	38	18	M10x35	32.92 x 3.53	315	0.58
1¹/₄″	42.8	32	58.72	79	30.18	68	41	21	M10x40	37.69 x 3.53	250	0.79
1¹/₂″	48.6	38	69.85	93	35.71	78	44	25	M12x45	47.22 x 3.53	200	1.25
2″	61.0	51	77.77	102	42.88	90	45	25	M12x45	56.74 x 3.53	200	1.39
2¹/₂″	77.0	63	88.90	114	50.80	105	50	25	M12x45	69.44 x 3.53	160	1.60
3″	92.0	73	106.38	134	61.93	124	50	27	M16x50	85.32 x 3.53	138	2.58
3¹/₂″	103.0	89	120.65	152	69.85	136	48	27	M16x50	98.02 x 3.53	35	2.83
4″	115.5	99	130.20	162	77.80	146	48	27	M16x50	110.72 x 3.53	35	3.27

* Dimensions dependent on manufacturer.
** O-ring material with hardness 90 Shore A

Material:
Steel S355J2G3 or equivalent
Stainless steel 1.4404 or equivalent

Dimensions in mm / Weights in kg

Technical data – accessories

DN-flange for KF 730 … 3150

DN 132 / BCD 180 for KF 730 … 1000

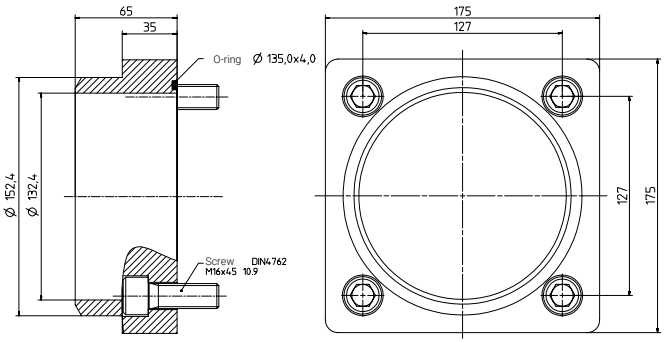

DN 160 / BCD 210 for KF 1250 … 1500

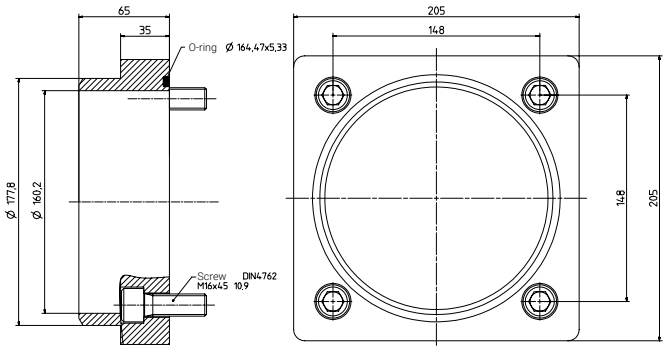

Note
Flanges for KF 1800 … 3150 on request.

Dimensions in mm

KRACHT GmbH
Gewerbestrasse 20
58791 Werdohl, Germany
Phone: +49 2392 935 0
E-Mail: info@kracht.eu

kracht.eu

Errors and technical changes reserved
KF 2.5 … 3150/EN/10.2026

Part of Atlas Copco Group

KRACHT®
FLUID TECHNOLOGY AND SYSTEMS